BOTH-WELL
柏緯鐵工股份有限公司

HIGH PRESSURE FITTINGS

FORGED

CARBON
ALLOY
STAINLESS STEEL
THREADED
SOCKET-WELD

INTRODUCTION

BOTH-WELL is equivalent to Win-Win, existing in between both consumers and manufacturer, both devoted employers and valued employees, a bilateral satisfaction.

Ever since its establishment in 1985, with the spirit of pursuing most advanced technology and striving for the ultimate quality-oriented products, the company is continuously utilizing the most up-to-date hi-tech facilities and most sophisticated manufacturing techniques, on the basis of skilled manpower and accumulated experiences, BOTH-WELL has been well-recognized among customers worldwide for the excellence of Quality and Services which has enabled us to win the unrivalled reputation in our industries.

QUALITY ASSURANCE

It is our indelible belief in Quality First.

BOTH-WELL's Quality Management System has been certified with ISO 9001、14001、45001, PED, together with all major international-recognized certificates and being granted as an approval vendor for ARAMCO, also being listed on the Approval Supplier List of major domestic refineries, petro-chemical factories in Taiwan.

BOTH-WELL prides itself for providing the best service performance which can be attributed to the implementation from our team of professionals as well as the amicable relationship and close partnership we have built up with all customers on a long term basis. We will continue to dedicate the utmost efforts to satisfying all customers' demands by supplying top quality products and high efficient services to reciprocate their consistent encouragements and supports.

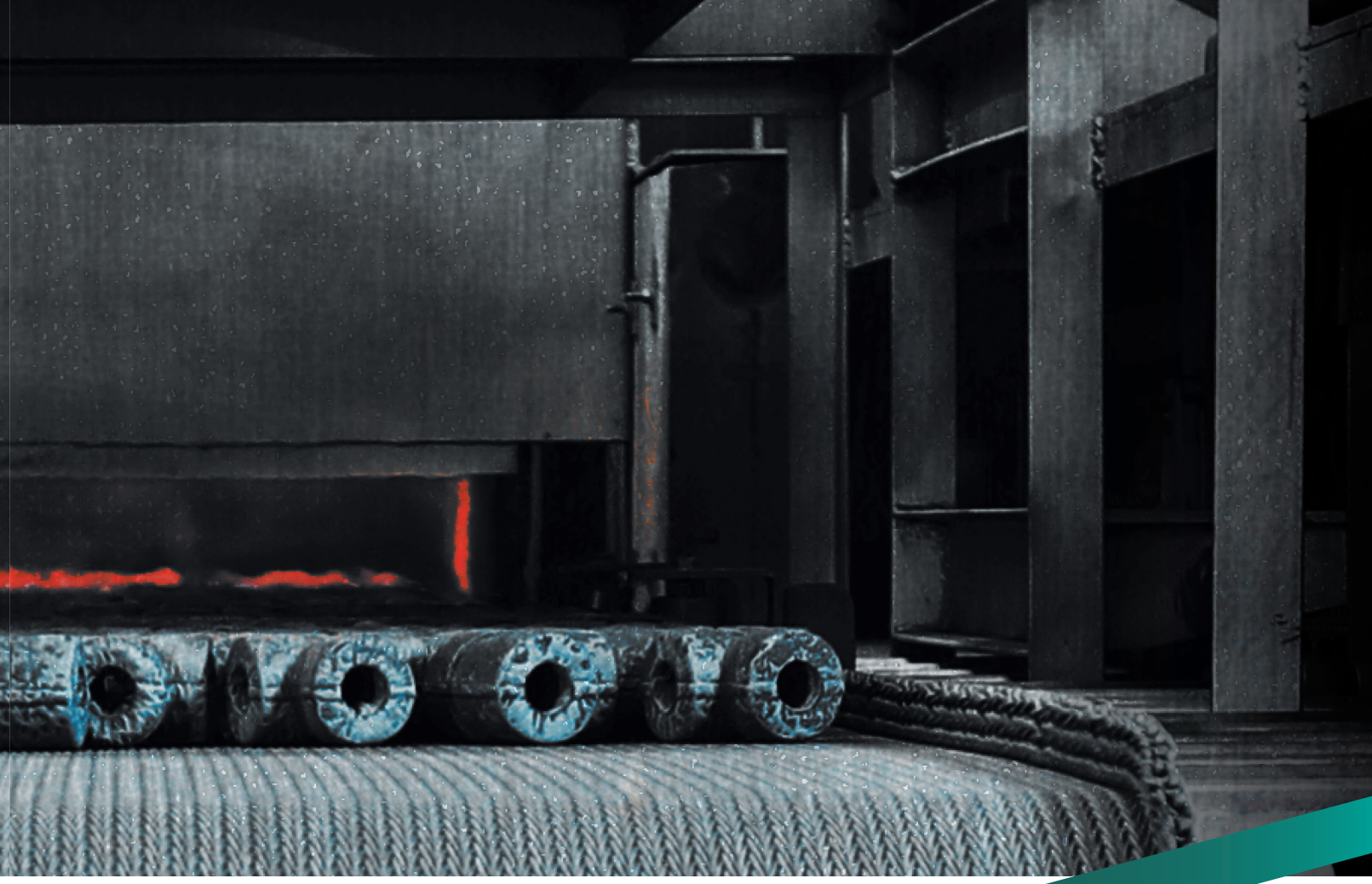

PRODUCTION RANGE AND SPECIFICATION

TYPE

A. ELBOW, TEE, COUPLING, HALF COUPLING, CAP, PLUG, BUSHING, UNION, OUTLET, SWAGE NIPPLE, BULL PLUG, REDUCER INSERT AND HEX. NIPPLE, STREET ELBOWS, BOSS,....ETC.
B. SOCKET-WELD, THREADED (NPT, AND PT, AND BSP(ISO7-1, ISO228-1)), BUTT-WELDING.

SIZE

NPS 1/8” ~ 4”
DN 6 ~ 100

RATING

PRESSURE : THREADED END - 2000 / 3000 / 6000 LBS.
SOCKET-WELD END – 3000 / 6000 / 9000 LBS.
BUTT WELD END – SCH40 / SCH80 / SCH160 / XXS

SPECIFICATIONS

A. DIM. SPEC. : ASME B16.11
MSS SP-79, 83, 95, 97 and BS3799.
B. MATERIAL SPEC : ASME/ASTM SA/A105, SA/A350 LF2, SA/A106, SA/A312, SA/A234, SA/A403.
ASME/ASTM
SA/A182(F304,F304L,F316,F316L,F304H,F316H,F317L,F321,F5,F9,F11,F22,F44,F51/60,F53,F91).
C. SIZE of RAW MATERIAL : DIA. 19 ~ 120mm ROUND BAR.

MARKING

A. CARBON and ALLOY STEEL: MARKED BY STAMPING or LASER MARKING.
B. STAINLESS STEEL: MARKED BY JET PRINTING or STAMPING or LASER MARKING.
C. 3/8” UNDER: BRAND ONLY.
D. 1/2” to 4” : MARKED WITH BRAND, MATERIAL, HEAT CODE, B16(FOR ASME B16.11 PRODUCT), RATING and SIZE.

FINISHING

CARBON STEEL – GALVANIZED, PHOSPHATE, or ANTI-RUST OIL COATING.
LOW ALLOY STEEL – PHOSPHATE, or ANTI-RUST OIL COATING.
STAINLESS STEEL – PICKLED.

PACKING

CARTON / PALLET
PLYWOODEN CASE.

FORGED HIGH PRESSURE PIPE FITTINGS SOCKET WELD 3000/6000/9000 Lbs

ELBOW 90°

ELBOW 45°

TEE

CROSS

UNION

COUPLING

HALF COUPLING

CAP

BOSS

OUTLET

45°BRANCH OUTLET

INSERT

SWAGE NIPPLE

COUPLET

FORGED HIGH PRESSURE PIPE FITTINGS THREADED 2000/3000/6000 Lbs

ELBOW 90°

ELBOW 45°

TEE

CROSS

STREET ELBOW

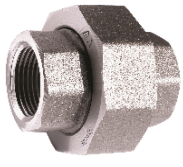

UNION

COUPLING

HALF COUPLING

REDUCING COUPLING

CAP

45°BRANCH OUTLET

HEX HEAD BUSHING

HEX HEAD PLUG

SQUARE HEAD PLUG

ROUND HEAD PLUG

BULL PLUG

BOSS

OUTLET

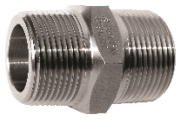

HEX NIPPLE

SWAGE NIPPLE

NIPPLE

COUPLET

FORGED HIGH PRESSURE PIPE FITTINGS BUTT WELD SCH40/SCH80/SCH160/XXS

WELDING OUTLET

45°BRANCH OUTLET

SWAGE NIPPLE

FORGED HIGH PRESSURE PIPE FITTINGS SPECIAL PRODUCTS

45°LATERAL TEE

NIPPLE BRANCH OUTLET

90° ELBOW

ASME B16.11-2016（Revision of ASME B16.11-2011）

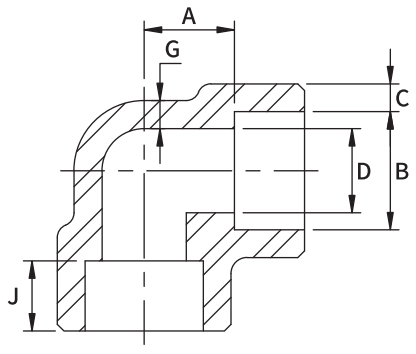

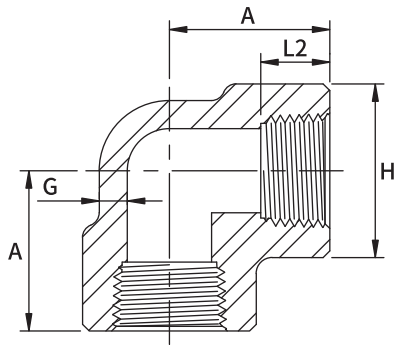

Dimensions are in millimeters.

Socket Welding							
DN	Nom. Pipe Size	B(1)	C	D(1)	A(1)	G (Min)	J
3000Lb							
6	1/8	10.8	3.20	6.9	11.0	2.41	10.5
8	1/4	14.2	3.80	9.3	11.0	3.02	10.5
10	3/8	17.6	4.05	12.6	13.5	3.20	10.5
15	1/2	21.8	4.70	15.8	15.5	3.73	12.5
20	3/4	27.2	4.90	21.0	19.0	3.91	14.0
25	1	33.9	5.70	26.7	22.5	4.55	15.0
32	1-1/4	42.7	6.10	35.1	27.0	4.85	17.0
40	1-1/2	48.8	6.40	40.9	32.0	5.08	17.5
50	2	61.2	6.95	52.5	38.0	5.54	22.0
65	2-1/2	73.9	8.80	62.7	41.0	7.01	34.0
80	3	89.8	9.55	78.0	57.0	7.62	28.0
100	4	115.2	10.70	102.3	66.5	8.56	38.5
6000Lb							
6	1/8	10.8	4.00	4.0	11.0	3.15	10.5
8	1/4	14.2	4.60	6.4	13.5	3.68	10.5
10	3/8	17.6	5.05	9.2	15.5	4.01	12.5
15	1/2	21.8	6.00	11.8	19.0	4.78	14.0
20	3/4	27.2	7.00	15.6	22.5	5.56	15.0
25	1	33.9	7.95	20.7	27.0	6.35	17.0
32	1-1/4	42.7	7.95	29.5	32.0	6.35	17.5
40	1-1/2	48.8	8.95	34.0	38.0	7.14	22.0
50	2	61.2	10.95	42.9	41.0	8.74	22.0
9000Lb							
15	1/2	21.8	9.35	6.4	25.5	7.47	12.5
20	3/4	27.2	9.80	11.1	28.5	7.82	15.0
25	1	33.9	11.40	15.2	32.0	9.09	17.5
32	1-1/4	42.7	12.15	22.8	35.0	9.70	22.0
40	1-1/2	48.8	12.70	28.0	38.0	10.15	22.0
50	2	61.2	13.85	38.2	54.0	11.07	22.0

(1) **Tolerance see page 11**

Dimensions are in millimeters.

Threaded					
DN	Nom. Pipe Size	Length of Thread. L2(*)	A	G (Min)	H
2000Lb					
6	1/8	8.8	21	3.18	22
8	1/4	11.4	21	3.18	22
10	3/8	12.4	25	3.18	25
15	1/2	14.9	28	3.18	33
20	3/4	16.8	33	3.18	38
25	1	19.6	38	3.68	46
32	1-1/4	21.9	44	3.89	56
40	1-1/2	22.7	51	4.01	62
50	2	23.9	60	4.27	75
65	2-1/2	30.5	76	5.61	92
80	3	32.8	86	5.99	109
100	4	34.6	106	6.55	146
3000Lb					
6	1/8	8.8	21	3.18	22
8	1/4	11.4	25	3.30	25
10	3/8	12.4	28	3.51	33
15	1/2	14.9	33	4.09	38
20	3/4	16.8	38	4.32	46
25	1	19.6	44	4.98	56
32	1-1/4	21.9	51	5.28	62
40	1-1/2	22.7	60	5.56	75
50	2	23.9	64	7.14	84
65	2-1/2	30.5	83	7.65	102
80	3	32.8	95	8.84	121
100	4	34.6	114	11.18	152
6000Lb					
6	1/8	8.8	25	6.35	25
8	1/4	11.4	28	6.60	33
10	3/8	12.4	33	6.98	38
15	1/2	14.9	38	8.15	46
20	3/4	16.8	44	8.53	56
25	1	19.6	51	9.93	62
32	1-1/4	21.9	60	10.59	75
40	1-1/2	22.7	64	11.07	84
50	2	23.9	83	12.09	102
65	2-1/2	30.5	95	15.29	121
80	3	32.8	106	16.64	146
100	4	34.6	114	18.67	152

(*) Dimension L2 is the length of useful thread. The length of useful thread shall be required by American National Standard for pipe threads (ANSI / ASME B1.20.1) .

45° ELBOW

ASME B16.11-2016（Revision of ASME B16.11-2011）

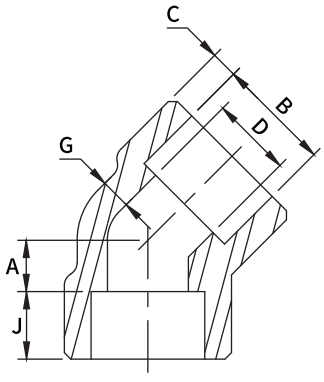

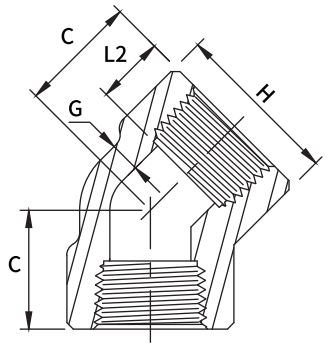

Dimensions are in millimeters.

Socket Welding

DN	Nom. Pipe Size	B(1)	C	D(1)	A(1)	G (Min)	J
3000Lb							
6	1/8	10.8	3.20	6.9	8.0	2.41	10.0
8	1/4	14.2	3.80	9.3	8.0	3.02	10.0
10	3/8	17.6	4.05	12.6	8.0	3.20	10.5
15	1/2	21.8	4.70	15.8	11.0	3.73	11.0
20	3/4	27.2	4.90	21.0	13.0	3.91	13.0
25	1	33.9	5.70	26.7	14.0	4.55	15.0
32	1-1/4	42.7	6.10	35.1	17.5	4.85	15.5
40	1-1/2	48.8	6.40	40.9	20.5	5.08	14.5
50	2	61.2	6.95	52.5	25.5	5.54	17.5
65	2-1/2	73.9	8.80	62.7	28.5	7.01	22.0
80	3	89.8	9.55	78.0	32.0	7.62	32.0
100	4	115.2	10.70	102.3	41.0	8.56	38.0
6000Lb							
6	1/8	10.8	4.00	4.0	8.0	3.15	10.0
8	1/4	14.2	4.60	6.4	8.0	3.68	10.5
10	3/8	17.6	5.05	9.2	11.0	4.01	10.5
15	1/2	21.8	6.00	11.8	12.5	4.78	12.5
20	3/4	27.2	7.00	15.6	14.0	5.56	14.0
25	1	33.9	7.95	20.7	17.5	6.35	15.0
32	1-1/4	42.7	7.95	29.5	20.5	6.35	15.0
40	1-1/2	48.8	8.95	34.0	25.5	7.14	17.0
50	2	61.2	10.95	42.9	28.5	8.74	16.5
9000Lb							
15	1/2	21.8	9.35	6.4	15.5	7.47	12.5
20	3/4	27.2	9.80	11.1	19.0	7.82	14.0
25	1	33.9	11.40	15.2	20.5	9.09	15.0
32	1-1/4	42.7	12.15	22.8	22.5	9.70	20.0
40	1-1/2	48.8	12.70	28.0	25.5	10.15	17.5
50	2	61.2	13.85	38.2	28.5	11.07	22.0

(1) **Tolerance see page 11**

Dimensions are in millimeters.

Threaded

DN	Nom. Pipe Size	Length of Thread. L2(*)	C	G (Min)	H
2000Lb					
6	1/8	8.8	17	3.18	22
8	1/4	11.4	17	3.18	22
10	3/8	12.4	19	3.18	25
15	1/2	14.9	22	3.18	33
20	3/4	16.8	25	3.18	38
25	1	19.6	28	3.68	46
32	1-1/4	21.9	33	3.89	56
40	1-1/2	22.7	35	4.01	62
50	2	23.9	43	4.27	75
65	2-1/2	30.5	52	5.61	92
80	3	32.8	64	5.99	109
100	4	34.6	79	6.55	146
3000Lb					
6	1/8	8.8	17	3.18	22
8	1/4	11.4	19	3.30	25
10	3/8	12.4	22	3.51	33
15	1/2	14.9	25	4.09	38
20	3/4	16.8	28	4.32	46
25	1	19.6	33	4.98	56
32	1-1/4	21.9	35	5.28	62
40	1-1/2	22.7	43	5.56	75
50	2	23.9	44	7.14	84
65	2-1/2	30.5	52	7.65	102
80	3	32.8	64	8.84	121
100	4	34.6	79	11.18	152
6000Lb					
6	1/8	8.8	19	6.35	25
8	1/4	11.4	22	6.60	33
10	3/8	12.4	25	6.98	38
15	1/2	14.9	28	8.15	46
20	3/4	16.8	33	8.53	56
25	1	19.6	35	9.93	62
32	1-1/4	21.9	43	10.59	75
40	1-1/2	22.7	44	11.07	84
50	2	23.9	52	12.09	102
65	2-1/2	30.5	64	15.29	121
80	3	32.8	79	16.64	146
100	4	34.6	79	18.67	152

(*) Dimension L2 is the length of useful thread. The length of useful thread shall be required by American National Standard for pipe threads (ANSI / ASME B1.20.1) .

TEE

ASME B16.11-2016（Revision of ASME B16.11-2011）

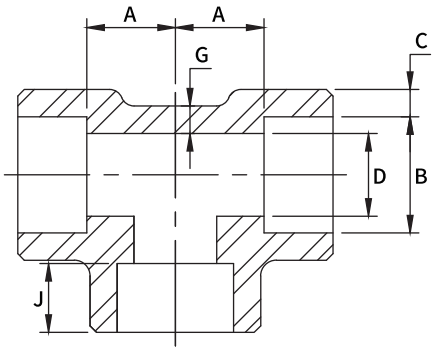

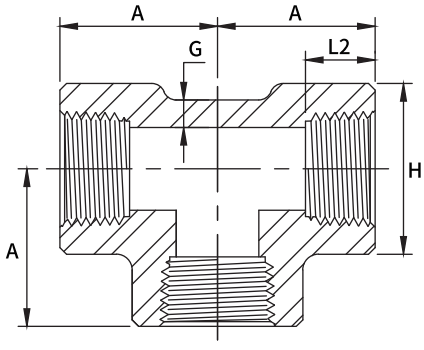

Dimensions are in millimeters.

Socket Welding							
DN	Nom. Pipe Size	B(1)	C	D(1)	A(1)	G (Min)	J
3000Lb							
6	1/8	10.8	3.20	6.9	11.0	2.41	10.5
8	1/4	14.2	3.80	9.3	11.0	3.02	10.5
10	3/8	17.6	4.05	12.6	13.5	3.20	10.5
15	1/2	21.8	4.70	15.8	15.5	3.73	12.5
20	3/4	27.2	4.90	21.0	19.0	3.91	14.0
25	1	33.9	5.70	26.7	22.5	4.55	15.0
32	1-1/4	42.7	6.10	35.1	27.0	4.85	17.0
40	1-1/2	48.8	6.40	40.9	32.0	5.08	17.5
50	2	61.2	6.95	52.5	38.0	5.54	22.0
65	2-1/2	73.9	8.80	62.7	41.0	7.01	34.0
80	3	89.8	9.55	78.0	57.0	7.62	28.0
100	4	115.2	10.70	102.3	66.5	8.56	38.5
6000Lb							
6	1/8	10.8	4.00	4.0	11.0	3.15	10.5
8	1/4	14.2	4.60	6.4	13.5	3.68	10.5
10	3/8	17.6	5.05	9.2	15.5	4.01	12.5
15	1/2	21.8	6.00	11.8	19.0	4.78	14.0
20	3/4	27.2	7.00	15.6	22.5	5.56	15.0
25	1	33.9	7.95	20.7	27.0	6.35	17.0
32	1-1/4	42.7	7.95	29.5	32.0	6.35	17.5
40	1-1/2	48.8	8.95	34.0	38.0	7.14	22.0
50	2	61.2	10.95	42.9	41.0	8.74	22.0
9000Lb							
15	1/2	21.8	9.35	6.4	25.5	7.47	12.5
20	3/4	27.2	9.80	11.1	28.5	7.82	15.0
25	1	33.9	11.40	15.2	32.0	9.09	17.5
32	1-1/4	42.7	12.15	22.8	35.0	9.70	22.0
40	1-1/2	48.8	12.70	28.0	38.0	10.15	22.0
50	2	61.2	13.85	38.2	54.0	11.07	22.0

(1) **Tolerance see page 11**

Dimensions are in millimeters.

Threaded					
DN	Nom. Pipe Size	Length of Thread. L2(*)	A	G (Min)	H
2000Lb					
6	1/8	8.8	21	3.18	22
8	1/4	11.4	21	3.18	22
10	3/8	12.4	25	3.18	25
15	1/2	14.9	28	3.18	33
20	3/4	16.8	33	3.18	38
25	1	19.6	38	3.68	46
32	1-1/4	21.9	44	3.89	56
40	1-1/2	22.7	51	4.01	62
50	2	23.9	60	4.27	75
65	2-1/2	30.5	76	5.61	92
80	3	32.8	86	5.99	109
100	4	34.6	106	6.55	146
3000Lb					
6	1/8	8.8	21	3.18	22
8	1/4	11.4	25	3.30	25
10	3/8	12.4	28	3.51	33
15	1/2	14.9	33	4.09	38
20	3/4	16.8	38	4.32	46
25	1	19.6	44	4.98	56
32	1-1/4	21.9	51	5.28	62
40	1-1/2	22.7	60	5.56	75
50	2	23.9	64	7.14	84
65	2-1/2	30.5	83	7.65	102
80	3	32.8	95	8.84	121
100	4	34.6	114	11.18	152
6000Lb					
6	1/8	8.8	25	6.35	25
8	1/4	11.4	28	6.60	33
10	3/8	12.4	33	6.98	38
15	1/2	14.9	38	8.15	46
20	3/4	16.8	44	8.53	56
25	1	19.6	51	9.93	62
32	1-1/4	21.9	60	10.59	75
40	1-1/2	22.7	64	11.07	84
50	2	23.9	83	12.09	102
65	2-1/2	30.5	95	15.29	121
80	3	32.8	106	16.64	146
100	4	34.6	114	18.67	152

(*) Dimension L2 is the length of useful thread. The length of useful thread shall be required by American National Standard for pipe threads (ANSI / ASME B1.20.1) .

CROSS

ASME B16.11-2016（Revision of ASME B16.11-2011）

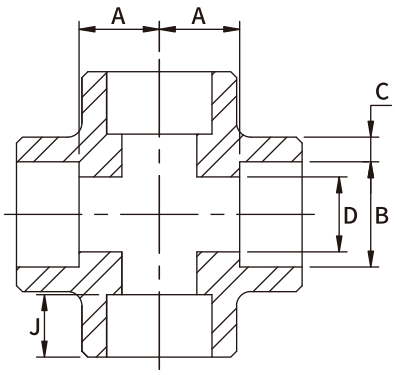

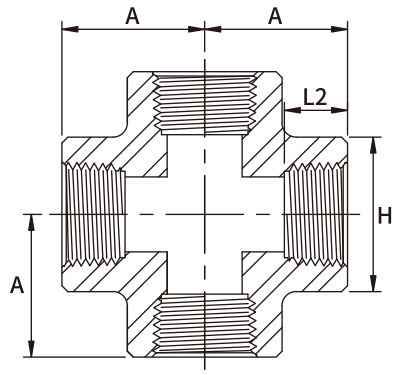

Dimensions are in millimeters.

Dimensions are in millimeters.

Socket Welding

DN	Nom. Pipe Size	B(1)	C	D(1)	A(1)	J
3000Lb						
6	1/8	10.8	3.20	6.9	11.0	10.5
8	1/4	14.2	3.80	9.3	11.0	10.5
10	3/8	17.6	4.05	12.6	13.5	10.5
15	1/2	21.8	4.70	15.8	15.5	12.5
20	3/4	27.2	4.90	21.0	19.0	14.0
25	1	33.9	5.70	26.7	22.5	15.0
32	1-1/4	42.7	6.10	35.1	27.0	17.0
40	1-1/2	48.8	6.40	40.9	32.0	17.5
50	2	61.2	6.95	52.5	38.0	22.0
65	2-1/2	73.9	8.80	62.7	41.0	34.0
80	3	89.8	9.55	78.0	57.0	28.0
100	4	115.2	10.70	102.3	66.5	38.5
6000Lb						
6	1/8	10.8	4.00	4.0	11.0	10.5
8	1/4	14.2	4.60	6.4	13.5	10.5
10	3/8	17.6	5.05	9.2	15.5	12.5
15	1/2	21.8	6.00	11.8	19.0	14.0
20	3/4	27.2	7.00	15.6	22.5	15.0
25	1	33.9	7.95	20.7	27.0	17.0
32	1-1/4	42.7	7.95	29.5	32.0	17.5
40	1-1/2	48.8	8.95	34.0	38.0	22.0
50	2	61.2	10.95	42.9	41.0	22.0
9000Lb						
15	1/2	21.8	9.35	6.4	25.5	12.5
20	3/4	27.2	9.80	11.1	28.5	15.0
25	1	33.9	11.40	15.2	32.0	17.5
32	1-1/4	42.7	12.15	22.8	35.0	22.0
40	1-1/2	48.8	12.70	28.0	38.0	22.0
50	2	61.2	13.85	38.2	54.0	22.0

(1) Tolerance see page 11

Threaded

DN	Nom. Pipe Size	Length of Thread. L2(*)	A	H
2000Lb				
6	1/8	8.8	21	22
8	1/4	11.4	21	22
10	3/8	12.4	25	25
15	1/2	14.9	28	33
20	3/4	16.8	33	38
25	1	19.6	38	46
32	1-1/4	21.9	44	56
40	1-1/2	22.7	51	62
50	2	23.9	60	75
65	2-1/2	30.5	76	92
80	3	32.8	86	109
100	4	34.6	106	146
3000Lb				
6	1/8	8.8	21	22
8	1/4	11.4	25	25
10	3/8	12.4	28	33
15	1/2	14.9	33	38
20	3/4	16.8	38	46
25	1	19.6	44	56
32	1-1/4	21.9	51	62
40	1-1/2	22.7	60	75
50	2	23.9	64	84
65	2-1/2	30.5	83	102
80	3	32.8	95	121
100	4	34.6	114	152
6000Lb				
6	1/8	8.8	25	25
8	1/4	11.4	28	33
10	3/8	12.4	33	38
15	1/2	14.9	38	46
20	3/4	16.8	44	56
25	1	19.6	51	62
32	1-1/4	21.9	60	75
40	1-1/2	22.7	64	84
50	2	23.9	83	102
65	2-1/2	30.5	95	121
80	3	32.8	106	146
100	4	34.6	114	152

(*) Dimension L2 is the length of useful thread. The length of useful thread shall be required by American National Standard for pipe threads (ANSI / ASME B1.20.1).

FULL COUPLING

ASME B16.11-2016（Revision of ASME B16.11-2011）

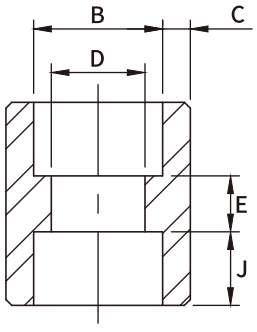

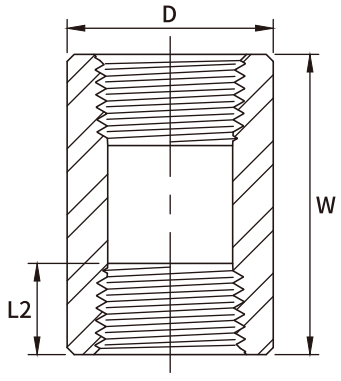

Dimensions are in millimeters.

Socket Welding						
DN	Nom. Pipe Size	B(1)	C	D(1)	E(1)	J
3000Lb						
6	1/8	10.8	3.20	6.9	6.5	10.5
8	1/4	14.2	3.80	9.3	6.5	10.5
10	3/8	17.6	4.05	12.6	6.5	10.5
15	1/2	21.8	4.70	15.8	9.5	12.5
20	3/4	27.2	4.90	21.0	9.5	14.0
25	1	33.9	5.70	26.7	12.5	15.0
32	1-1/4	42.7	6.10	35.1	12.5	17.0
40	1-1/2	48.8	6.40	40.9	12.5	17.5
50	2	61.2	6.95	52.5	19.0	22.0
65	2-1/2	73.9	8.80	62.7	19.0	22.0
80	3	89.8	9.55	78.0	19.0	22.0
100	4	115.2	10.70	102.3	19.0	22.0
6000Lb						
6	1/8	10.8	4.00	4.0	6.5	10.5
8	1/4	14.2	4.60	6.4	6.5	10.5
10	3/8	17.6	5.05	9.2	6.5	10.5
15	1/2	21.8	6.00	11.8	9.5	12.5
20	3/4	27.2	7.00	15.6	9.5	14.0
25	1	33.9	7.95	20.7	12.5	15.0
32	1-1/4	42.7	7.95	29.5	12.5	17.0
40	1-1/2	48.8	8.95	34.0	12.5	17.5
50	2	61.2	10.95	42.9	19.0	22.0
9000Lb						
15	1/2	21.8	9.35	6.4	9.5	12.5
20	3/4	27.2	9.80	11.1	9.5	14.0
25	1	33.9	11.40	15.2	12.5	15.0
32	1-1/4	42.7	12.15	22.8	12.5	17.0
40	1-1/2	48.8	12.70	28.0	12.5	17.5
50	2	61.2	13.85	38.2	19.0	22.0

(1) Tolerance see page 11
(2) Reducer : "C, J, E" in accordance with large size.
"D" in accordance with small size.
The others in accordance with each size.

Dimensions are in millimeters.

Threaded				
DN	Nom. Pipe Size	Length of Thread. L2(*)	W	D
3000Lb				
6	1/8	8.8	32	16
8	1/4	11.4	35	19
10	3/8	12.4	38	22
15	1/2	14.9	48	28
20	3/4	16.8	51	35
25	1	19.6	60	44
32	1-1/4	21.9	67	57
40	1-1/2	22.7	79	64
50	2	23.9	86	76
65	2-1/2	30.5	92	92
80	3	32.8	108	108
100	4	34.6	121	140
6000Lb				
6	1/8	8.8	32	22
8	1/4	11.4	35	25
10	3/8	12.4	38	32
15	1/2	14.9	48	38
20	3/4	16.8	51	44
25	1	19.6	60	57
32	1-1/4	21.9	67	64
40	1-1/2	22.7	79	76
50	2	23.9	86	92
65	2-1/2	30.5	92	108
80	3	32.8	108	127
100	4	34.6	121	159

(*) Dimension L2 is the length of useful thread. The length of useful thread shall be required by American National Standard for pipe threads (ANSI / ASME B1.20.1).

HALF COUPLING

ASME B16.11-2016（Revision of ASME B16.11-2011）

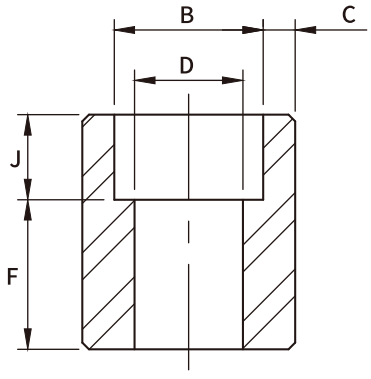

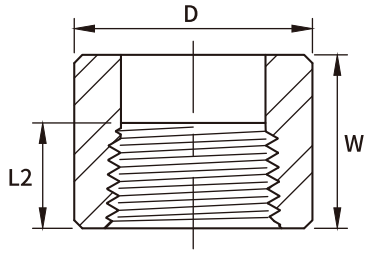

Dimensions are in millimeters.

Dimensions are in millimeters.

Socket Welding

DN	Nom. Pipe Size	B(1)	C	D(1)	F(1)	J
3000Lb						
6	1/8	10.8	3.20	6.9	16.0	10.5
8	1/4	14.2	3.80	9.3	16.0	10.5
10	3/8	17.6	4.05	12.6	17.5	10.5
15	1/2	21.8	4.70	15.8	22.5	12.5
20	3/4	27.2	4.90	21.0	24.0	14.0
25	1	33.9	5.70	26.7	28.5	15.0
32	1-1/4	42.7	6.10	35.1	30.0	17.0
40	1-1/2	48.8	6.40	40.9	32.0	17.5
50	2	61.2	6.95	52.5	41.0	22.0
65	2-1/2	73.9	8.80	62.7	43.0	22.0
80	3	89.8	9.55	78.0	44.5	22.0
100	4	115.2	10.70	102.3	48.0	22.0
6000Lb						
6	1/8	10.8	4.00	4.0	16.0	10.5
8	1/4	14.2	4.60	6.4	16.0	10.5
10	3/8	17.6	5.05	9.2	17.5	10.5
15	1/2	21.8	6.00	11.8	22.5	12.5
20	3/4	27.2	7.00	15.6	24.0	14.0
25	1	33.9	7.95	20.7	28.5	15.0
32	1-1/4	42.7	7.95	29.5	30.0	17.0
40	1-1/2	48.8	8.95	34.0	32.0	17.5
50	2	61.2	10.95	42.9	41.0	22.0
9000Lb						
15	1/2	21.8	9.35	6.4	22.5	12.5
20	3/4	27.2	9.80	11.1	24.0	14.0
25	1	33.9	11.40	15.2	28.5	15.0
32	1-1/4	42.7	12.15	22.8	30.0	17.0
40	1-1/2	48.8	12.70	28.0	32.0	17.5
50	2	61.2	13.85	38.2	41.0	22.0

(1) **Tolerance see page 11**

Threaded

DN	Nom. Pipe Size	Length of Thread. L2(*)	W	D
3000Lb				
6	1/8	8.8	16.0	16
8	1/4	11.4	17.5	19
10	3/8	12.4	19.0	22
15	1/2	14.9	24.0	28
20	3/4	16.8	25.5	35
25	1	19.6	30.0	44
32	1-1/4	21.9	33.5	57
40	1-1/2	22.7	39.5	64
50	2	23.9	43.0	76
65	2-1/2	30.5	46.0	92
80	3	32.8	54.0	108
100	4	34.6	60.5	140
6000Lb				
6	1/8	8.8	16.0	22
8	1/4	11.4	17.5	25
10	3/8	12.4	19.0	32
15	1/2	14.9	24.0	38
20	3/4	16.8	25.5	44
25	1	19.6	30.0	57
32	1-1/4	21.9	33.5	64
40	1-1/2	22.7	39.5	76
50	2	23.9	43.0	92
65	2-1/2	30.5	46.0	108
80	3	32.8	54.0	127
100	4	34.6	60.5	159

(*) Dimension L2 is the length of useful thread. The length of useful thread shall be required by American National Standard for pipe threads (ANSI / ASME B1.20.1).

CAP

ASME B16.11-2016（Revision of ASME B16.11-2011）

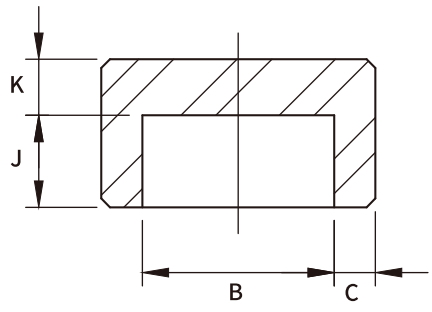

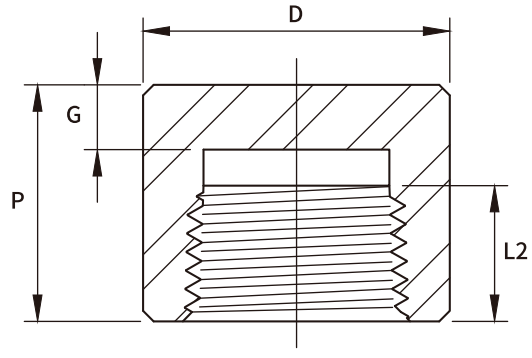

Dimensions are in millimeters.

Socket Welding					
DN	Nom. Pipe Size	B(1)	C	K	J
3000Lb					
6	1/8	10.8	3.20	7	10.5
8	1/4	14.2	3.80	7	10.5
10	3/8	17.6	4.05	8.6	10.5
15	1/2	21.8	4.70	11.7	10.5
20	3/4	27.2	4.90	10.4	15
25	1	33.9	5.70	12	15
32	1-1/4	42.7	6.10	15.2	15
40	1-1/2	48.8	6.40	16.8	15
50	2	61.2	6.95	19.1	19
65	2-1/2	73.9	8.80	22	19
80	3	89.8	9.55	25.5	19
100	4	115.2	10.70	26.6	21
6000Lb					
6	1/8	10.8	4.00	9.5	10.5
8	1/4	14.2	4.60	10.5	10.5
10	3/8	17.6	5.05	12.5	10.5
15	1/2	21.8	6.00	14.5	10.5
20	3/4	27.2	7.00	13	15
25	1	33.9	7.95	16	15
32	1-1/4	42.7	7.95	18	15
40	1-1/2	48.8	8.95	23	15
50	2	61.2	10.95	22	19
9000Lb					
15	1/2	21.8	9.35	14.5	12.5
20	3/4	27.2	9.80	17	14
25	1	33.9	11.40	20	15
32	1-1/4	42.7	12.15	18	17
40	1-1/2	48.8	12.70	23.5	17.5
50	2	61.2	13.85	22	22

(1) **Tolerance see page 11**

Dimensions are in millimeters.

Threaded					
DN	Nom. Pipe Size	Length of Thread. L2(*)	P	D	G
3000Lb					
6	1/8	8.8	19	16	4.8
8	1/4	11.4	25	19	4.8
10	3/8	12.4	25	22	4.8
15	1/2	14.9	32	28	6.4
20	3/4	16.8	37	35	6.4
25	1	19.6	41	44	9.7
32	1-1/4	21.9	44	57	9.7
40	1-1/2	22.7	44	64	11.2
50	2	23.9	48	76	12.7
65	2-1/2	30.5	60	92	15.7
80	3	32.8	65	108	19.0
100	4	34.6	68	140	22.4
6000Lb					
6	1/8	8.8	22	22	6.4
8	1/4	11.4	27	25	6.4
10	3/8	12.4	27	32	6.4
15	1/2	14.9	33	38	7.9
20	3/4	16.8	38	44	7.9
25	1	19.6	43	57	11.2
32	1-1/4	21.9	46	64	11.2
40	1-1/2	22.7	48	76	12.7
50	2	23.9	51	92	15.7
65	2-1/2	30.5	64	108	19.0
80	3	32.8	68	127	22.4
100	4	34.6	75	159	28.4

(*) Dimension L2 is the length of useful thread. The length of useful thread shall be required by American National Standard for pipe threads (ANSI / ASME B1.20.1).

SQUARE HEAD & ROUND HEAD PLUG

ASME B16.11-2016（Revision of ASME B16.11-2011）

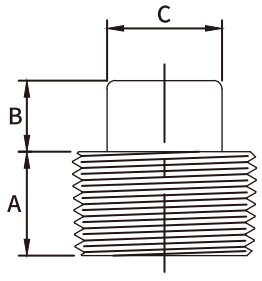

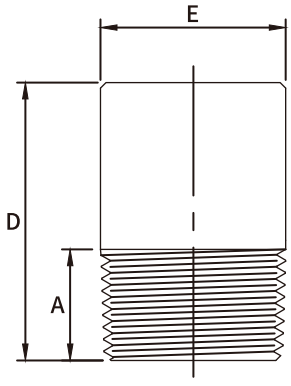

Dimensions are in millimeters.

Square Head Plug				
DN	Nom.Pipe Size	A	B	C
6	1/8	10	6	7.15
8	1/4	11	6	9.55
10	3/8	13	8	11.11
15	1/2	14	10	14.29
20	3/4	16	11	15.88
25	1	19	13	20.64
32	1-1/4	21	14	23.81
40	1-1/2	21	16	28.58
50	2	22	18	33.27
65	2-1/2	27	19	38.10
80	3	28	21	42.86
100	4	32	25	63.50

Dimensions are in millimeters.

Round Head Plug				
DN	Nom.Pipe Size	A	E	D
6	1/8	10	10	35
8	1/4	11	14	41
10	3/8	13	18	41
15	1/2	14	21	44
20	3/4	16	27	44
25	1	19	33	51
32	1-1/4	21	43	51
40	1-1/2	21	48	51
50	2	22	60	64
65	2-1/2	27	73	70
80	3	28	89	70
100	4	32	114	76

DIMENSIONAL TOLERANCE OF ASME B16.11

ASME B16.11-2016 *Unit : mm*

Item	Type of Pipe Fitting	Size				
		DN	6 to 8	10 to 20	25 to 50	65 to 100
		NPS	1/8 to 1/4	3/8 to 3/4	1 to 2	2-1/2 to 4
Bore diameter of socket (B)	All types of Pipe fittings		+0.4 -0.0	+0.4 -0.0	+0.4 -0.0	+0.5 -0.0
Bore diameter of fitting (D)			±0.7	±0.7	±0.7	±1.4
Concentricity of bore (X)			±0.8			
Coincidence of axes (Y)			1/200 Max			
Center to bottom of socket (A)	45° 90° Elbow, Tee, Cross		±1.0	±1.5	±2.0	±2.5
Bottom to bottom of socket (E)	Full Coupling		±1.5	±3.0	±4.0	±5.0
Bottom of socket to opposite face (F)	Half Coupling		±1.0	±1.5	±2.0	±2.5

HEX HEAD PLUG & BUSHING

ASME B16.11-2016（Revision of ASME B16.11-2011）

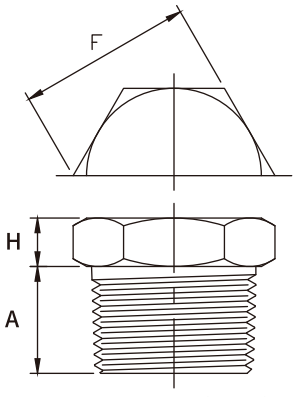

Dimensions are in millimeters.

Hex Head Plug				
DN	Nom.Pipe Size	A	F(*)	H
6	1/8	12	11.0	6
8	1/4	15	16.0	6
10	3/8	15	18.0	8
15	1/2	17	22.0	8
20	3/4	20	27.0	10
25	1	22	35.0	10
32	1-1/4	22.5	45.5	14
40	1-1/2	22.5	50.0	16
50	2	24	64.0	18
65	2-1/2	29	76.0	19
80	3	30.5	90.0	21
100	4	34	118.5	25

(*) Dimension F is according to the Both-Well manufacturing standard.

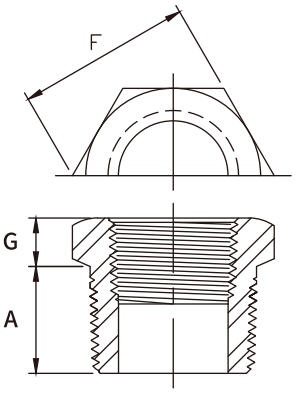

Dimensions are in millimeters.

Hex Head Bushing				
DN	Nom.Pipe Size	A	F(*)	G
8	1/4	15	16.0	5
10	3/8	15	18.0	7
15	1/2	17	22.0	9
20	3/4	20	27.0	9
25	1	22	35.0	10
32	1-1/4	23	45.5	11
40	1-1/2	25	50.0	11
50	2	26	64.0	12
65	2-1/2	31	76.0	14
80	3	34	90.0	16
100	4	36	118.5	18

(1) CAUTIONARY NOTE REGARDING HEX BUSHINGS.
Hex Head Bushings of one-size reduction should not be Used in services where they might be subject to harmful Loads and forces ther than internal pressures.

(*) Dimension F is according to the Both-Well manufacturing standard.

STREET ELBOW

ASME B16.11-2016（Revision of ASME B16.11-2011）

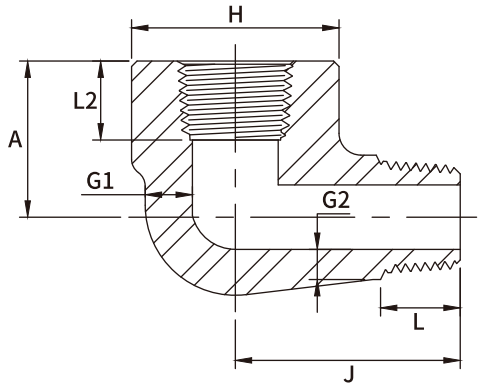

Dimensions are in millimeters.

DN	Nom. Pipe Size	H	A	J	G1 (Min)	G2[1] (Min)	L2[2]	L[2]
3000Lb								
6	1/8	19	19	25	3.18	2.74	8.8	10.9
8	1/4	25	22	32	3.30	3.22	11.4	12.4
10	3/8	32	25	38	3.51	3.50	12.4	14.4
15	1/2	38	28	41	4.09	4.16	14.9	15.8
20	3/4	44	35	48	4.32	4.88	16.8	17.8
25	1	51	44	57	4.98	5.56	19.6	21.2
32	1-1/4	62	51	66	5.28	5.56	21.9	23.2
40	1-1/2	70	54	71	5.56	6.25	22.7	23.2
50	2	84	64	84	7.14	7.64	23.9	24.2
6000Lb								
6	1/8	25	22	32	5.08	4.22	8.8	10.9
8	1/4	32	25	38	5.66	5.28	11.4	12.4
10	3/8	38	28	41	6.98	5.59	12.4	14.4
15	1/2	44	35	48	8.15	6.53	14.9	15.8
20	3/4	51	44	57	8.53	6.86	16.8	17.8
25	1	62	51	66	9.93	7.95	19.6	21.2
32	1-1/4	70	54	71	10.59	8.48	21.9	23.2
40	1-1/2	84	64	84	11.07	8.89	22.7	23.2
50	2	102	83	105	12.09	9.70	23.9	24.2

(1) Wall thickness before threading.
(2) Dimension L2 and L is the length of useful thread. The length of useful thread shall be required by American National Standard for pipe threads (ANSI / ASME B1.20.1)

BOSS

ASME B16.11-2016（Revision of ASME B16.11-2011）

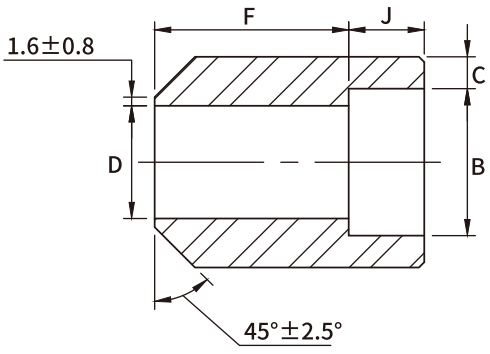

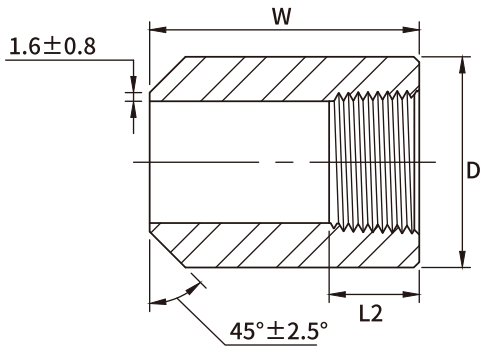

Dimensions are in millimeters.

Socket Welding						
DN	Nom. Pipe Size	B(1)	C	D(1)	F(1)	J
3000Lb						
6	1/8	10.8	3.20	6.9	16.0	10.5
8	1/4	14.2	3.80	9.3	16.0	10.5
10	3/8	17.6	4.05	12.6	17.5	10.5
15	1/2	21.8	4.70	15.8	22.5	12.5
20	3/4	27.2	4.90	21.0	24.0	14.0
25	1	33.9	5.70	26.7	28.5	15.0
32	1-1/4	42.7	6.10	35.1	30.0	17.0
40	1-1/2	48.8	6.40	40.9	32.0	17.5
50	2	61.2	6.95	52.5	41.0	22.0
65	2-1/2	73.9	8.80	62.7	43.0	22.0
80	3	89.8	9.55	78.0	44.5	22.0
100	4	115.2	10.70	102.3	48.0	22.0
6000Lb						
6	1/8	10.8	4.00	4.0	16.0	10.5
8	1/4	14.2	4.60	6.4	16.0	10.5
10	3/8	17.6	5.05	9.2	17.5	10.5
15	1/2	21.8	6.00	11.8	22.5	12.5
20	3/4	27.2	7.00	15.6	24.0	14.0
25	1	33.9	7.95	20.7	28.5	15.0
32	1-1/4	42.7	7.95	29.5	30.0	17.0
40	1-1/2	48.8	8.95	34.0	32.0	17.5
50	2	61.2	10.95	42.9	41.0	22.0
9000Lb						
15	1/2	21.8	9.35	6.4	22.5	12.5
20	3/4	27.2	9.80	11.1	24.0	14.0
25	1	33.9	11.40	15.2	28.5	15.0
32	1-1/4	42.7	12.15	22.8	30.0	17.0
40	1-1/2	48.8	12.70	28.0	32.0	17.5
50	2	61.2	13.85	38.2	41.0	22.0

(1) **Tolerance see page 11**

Dimensions are in millimeters.

Threaded				
DN	Nom. Pipe Size	Length of Thread. L2(*)	W	D
3000Lb				
6	1/8	8.8	16.0	16
8	1/4	11.4	17.5	19
10	3/8	12.4	19.0	22
15	1/2	14.9	24.0	28
20	3/4	16.8	25.5	35
25	1	19.6	30.0	44
32	1-1/4	21.9	33.5	57
40	1-1/2	22.7	39.5	64
50	2	23.9	43.0	76
65	2-1/2	30.5	46.0	92
80	3	32.8	54.0	108
100	4	34.6	60.5	140
6000Lb				
6	1/8	8.8	16.0	22
8	1/4	11.4	17.5	25
10	3/8	12.4	19.0	32
15	1/2	14.9	24.0	38
20	3/4	16.8	25.5	44
25	1	19.6	30.0	57
32	1-1/4	21.9	33.5	64
40	1-1/2	22.7	39.5	76
50	2	23.9	43.0	92
65	2-1/2	30.5	46.0	108
80	3	32.8	54.0	127
100	4	34.6	60.5	159

(*) Dimension L2 is the length of useful thread. The length of useful thread shall be required by American National Standard for pipe threads (ANSI / ASME B1.20.1) .

COUPLET

ASME B16.11-2016（Revision of ASME B16.11-2011）

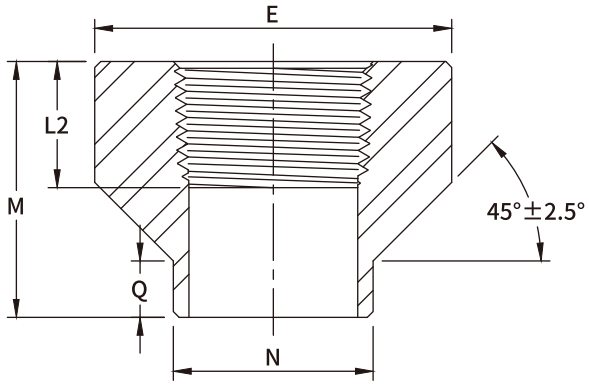

Dimensions are in millimeters.

Threaded						
DN	Nom.Pipe Size	Length of Thread. L2(*)	N	Q	M	E
3000Lb						
8	1/4	11.4	17.5	9.5	30.2	23.8
10	3/8	12.4	20.7	9.5	30.2	27.0
15	1/2	14.9	23.8	9.5	33.4	33.4
20	3/4	16.8	27.0	9.5	34.9	38.1
25	1	19.6	33.4	9.5	42.9	46.1
32	1-1/4	21.9	42.9	9.5	47.6	55.6
40	1-1/2	22.7	49.2	9.5	50.8	63.5
50	2	23.9	61.9	9.5	57.2	79.4
65	2-1/2	30.5	73.0	9.5	63.5	92.1
80	3	32.8	88.9	9.5	69.9	111.1
100	4	34.6	114.3	9.5	76.2	141.3
6000Lb						
8	1/4	11.4	17.5	9.5	30.2	25.4
10	3/8	12.4	20.7	9.5	30.2	31.8
15	1/2	14.9	23.8	9.5	33.4	38.1
20	3/4	16.8	27.0	9.5	34.9	44.5
25	1	19.6	33.4	9.5	42.9	57.2
32	1-1/4	21.9	42.9	9.5	47.6	63.5
40	1-1/2	22.7	49.2	9.5	50.8	76.2
50	2	23.9	61.9	9.5	57.2	92.1
65	2-1/2	30.5	73.0	9.5	63.5	108.0
80	3	32.8	88.9	9.5	69.9	127.0
100	4	34.6	114.3	9.5	76.2	158.8

DIMENSIONAL TOLERANCE OF ASME B16.11

ASME B16.11-2016 *Unit : mm*

Item	N	Q	M	E
1/4"~1-1/2"	+1.5/-0.0	±0.8	+0.8/-0.0	+1.5/-0.0
2"~4"	+1.5/-0.0	±0.8	+1.5/-0.0	+1.5/-0.0

(*) Dimension L2 is the length of useful thread. The length of useful thread shall be required by American National Standard for pipe threads (ANSI / ASME B1.20.1).

COUPLET

ASME B16.11-2016（Revision of ASME B16.11-2011）

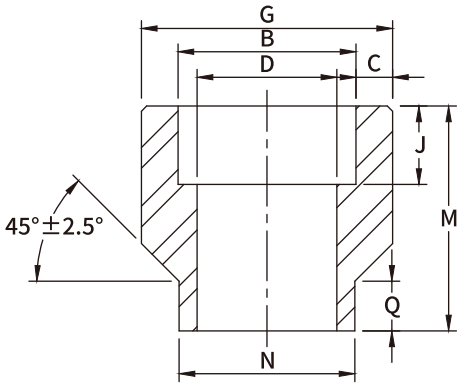

Dimensions are in millimeters.

Socket Welding									
DN	Nom.Pipe Size	B(1)	C	D(1)	J	N	Q	M	G
3000Lb									
8	1/4	14.2	3.80	9.3	10.5	17.5	9.5	30.2	23.8
10	3/8	17.6	4.05	12.6	10.5	20.7	9.5	30.2	27.0
15	1/2	21.8	4.70	15.8	12.5	23.8	9.5	33.4	33.4
20	3/4	27.2	4.90	21.0	14.0	27.0	9.5	34.9	38.1
25	1	33.9	5.70	26.7	15.0	33.4	9.5	42.9	46.1
32	1-1/4	42.7	6.10	35.1	17.0	42.9	9.5	47.6	55.6
40	1-1/2	48.8	6.40	40.9	17.5	49.2	9.5	50.8	63.5
50	2	61.2	6.95	52.5	22.0	61.9	9.5	57.2	79.4
65	2-1/2	73.9	8.80	62.7	22.0	73.0	9.5	63.5	92.1
80	3	89.8	9.55	78.0	22.0	88.9	9.5	69.9	111.1
100	4	115.2	10.70	102.3	22.0	114.3	9.5	76.2	141.3
6000Lb									
8	1/4	14.2	4.60	6.4	10.5	17.5	9.5	30.2	25.4
10	3/8	17.6	5.05	9.2	10.5	20.7	9.5	30.2	31.8
15	1/2	21.8	6.00	11.8	12.5	23.8	9.5	33.4	38.1
20	3/4	27.2	7.00	15.6	14.0	27.0	9.5	34.9	44.5
25	1	33.9	7.95	20.7	15.0	33.4	9.5	42.9	57.2
32	1-1/4	42.7	7.95	29.5	17.0	42.9	9.5	47.6	63.5
40	1-1/2	48.8	8.95	34.0	17.5	49.2	9.5	50.8	76.2
50	2	61.2	10.95	42.9	22.0	61.9	9.5	57.2	92.1

DIMENSIONAL TOLERANCE OF ASME B16.11

ASME B16.11-2016 *Unit : mm*

Item	N	Q	M	E
1/4"~1-1/2"	+1.5/-0.0	±0.8	+0.8/-0.0	+1.5/-0.0
2"~4"	+1.5/-0.0	±0.8	+1.5/-0.0	+1.5/-0.0

(1) **Tolerance see page 11.**

BOSS
BS3799-1974

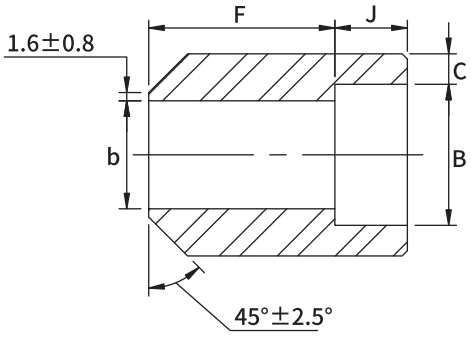

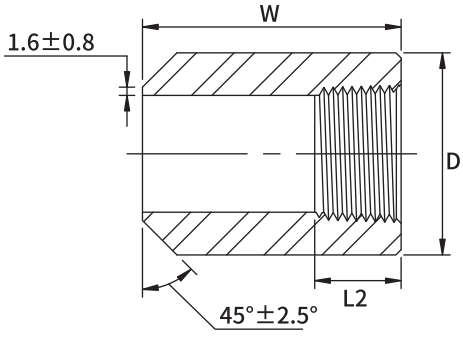

Dimensions are in millimeters.

Socket Welding						
Nom. Pipe Size	DN	B	b	J	F	C
3000Lb						
1/8	6	10.7	6.8	11.0	28.0	3.2
1/4	8	14.1	9.2	11.0	32.0	3.3
3/8	10	17.6	12.5	12.0	34.0	3.5
1/2	15	21.8	15.5	14.0	38.0	4.1
3/4	20	27.4	21.0	14.0	38.0	4.3
1	25	34.1	26.5	17.0	35.0	5.0
1-1/2	40	49.0	40.5	20.0	32.0	5.6
2	50	61.0	52.0	23.0	29.0	6.1
2-1/2	65	73.8	62.0	23.0	29.0	7.7
3	80	89.7	78.0	23.0	29.0	8.3
6000Lb						
1/2	15	21.8	11.8	14.0	38.0	5.2
3/4	20	27.4	15.5	14.0	38.0	6.1
1	25	34.1	20.7	17.0	35.0	7.0
1-1/2	40	49.0	34.0	20.0	32.0	7.8
2	50	61.0	43.0	23.0	29.0	9.5
2-1/2	65	73.8	54.0	23.0	29.0	10.4
3	80	89.7	66.0	23.0	29.0	12.2

Dimensions are in millimeters.

Threaded				
Nom. Pipe Size	DN	D	W	L2(*)
3000Lb				
1/8	6	16.0	38.0	8.8
1/4	8	19.0	41.0	11.4
3/8	10	22.0	45.0	12.4
1/2	15	29.0	51.0	14.9
3/4	20	35.0	51.0	16.8
1	25	45.0	51.0	19.6
1-1/2	40	64.0	51.0	22.7
2	50	76.0	51.0	23.9
2-1/2	65	95.0	51.0	30.5
3	80	110.0	57.0	32.8
4	100	140.0	64.0	34.6
6000Lb				
1/8	6	22.0	38.0	8.8
1/4	8	26.0	41.0	11.4
3/8	10	32.0	45.0	12.4
1/2	15	38.0	51.0	14.9
3/4	20	45.0	51.0	16.8
1	25	60.0	51.0	19.6
1-1/2	40	76.0	51.0	22.7
2	50	95.0	51.0	23.9

(*) Dimension L2 is the length of useful thread. The length of useful thread shall be required by American National Standard for pipe threads (ANSI / ASME B1.20.1) .

DIMENSIONAL TOLERANCE OF BS3799

BS3799-1974 *Unit : mm*

Item	Type of pipe fitting	DN	6～8	10～20	25～50	65～80
		NPS	1/8"～1/4"	3/8"～3/4"	1"～2"	2-1/2"～3"
Concentricity of bore (X)	All fittings	±0.8				
Coincidence of axes (Y)		±1/200				
Bore diameter of fitting (b)	Boss & Hex Nipple	±0.4				±0.8
Bottom of socket to opposite face (F)	Boss	±0.8		±1.5	±2.0	±2.5

HEX NIPPLE
BS3799-1974

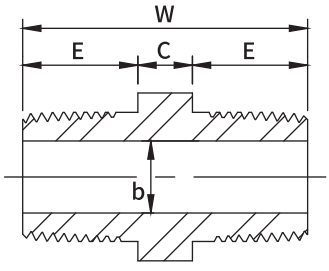

FULL SIZE

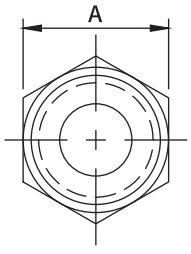

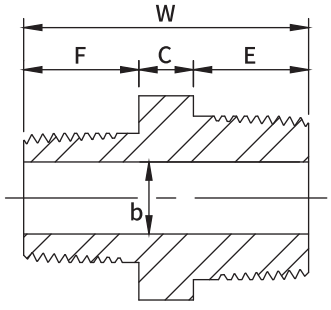

REDUCING SIZE

Dimensions are in millimeters.

Nominal Size				A	W	E	b(1)		C	F
Equal		Reducing								
In	DN	In	DN				3M	6M		
1/8	(6)	—	—	11	26	11	5	2	6	—
1/4	(8)	—	—	15	36	15.5	8	6	6	—
—	—	1/4 x 1/8	(8 x 6)	15	31	15.5	5	2	6	11
3/8	(10)	—	—	18	40	16.5	11	8	8	—
—	—	3/8 x 1/4	(10 x 8)	18	39	16.5	8	6	8	15.5
1/2	(15)	—	—	22	48	20.5	14	11	8	—
—	—	1/2 x 3/8	(15 x 10)	22	44	20.5	11	8	8	16.5
—	—	1/2 x 1/4	(15 x 8)	22	43	20.5	8	6	8	15.5
3/4	(20)	—	—	27	52	21.5	19	13	10	—
—	—	3/4 x 1/2	(20 x 15)	27	50	21.5	14	11	9	20.5
—	—	3/4 x 3/8	(20 x 10)	27	46	21.5	11	8	9	16.5
1	(25)	—	—	35	60	25.5	24	17	10	—
—	—	1 x 3/4	(25 x 20)	35	56	25.5	19	13	10	21.5
—	—	1 x 1/2	(25 x 15)	35	55	25.5	14	11	10	20.5
1-1/2	(40)	—	—	50	68	26.5	38	30	16	—
—	—	1-1/2 x 1	(40 x 25)	50	67	26.5	24	17	16	25.5
—	—	1-1/2 x 3/4	(40 x 20)	50	63	26.5	19	13	16	21.5
—	—	1-1/2 x 1/2	(40 x 15)	50	62	26.5	14	11	16	20.5
2	(50)	—	—	62	71	27.5	49	39	17	—
—	—	2 x 1-1/2	(50 x 40)	62	70	27.5	38	30	17	26.5
—	—	2 x 1	(50 x 25)	62	70	27.5	24	17	18	25.5
—	—	2 x 3/4	(50 x 20)	62	65	27.5	19	13	17	21.5
—	—	2 x 1/2	(50 x 15)	62	65	27.5	14	11	18	20.5

(1) Tolerance see page 17
(2) 3M & 6M symbols denote 3000 & 6000 classes.

THREADED END UNION

MSS SP-83-2018

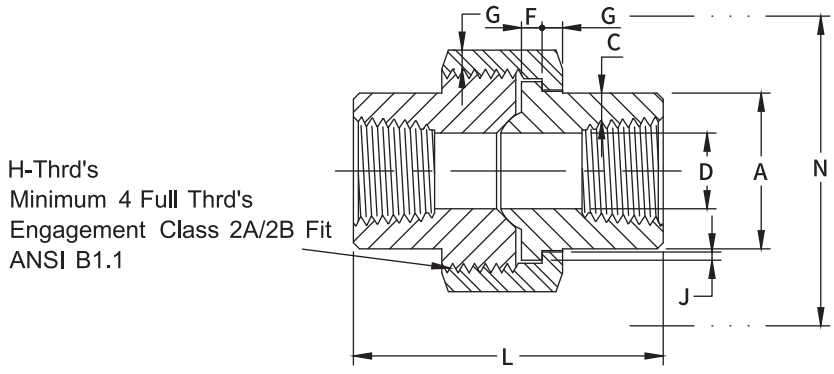

3000Lb

Dimensions are in millimeters.

Nom. Pipe Size	Pipe End A	Wall (Min) C	Water Way Bore D	Male Flange (Min) F	Nut (Min) G	Thrds. Per 25.4mm H	Bearing (Min) J	Length Assem. Nom. L	Clear Assem. Nut N
1/8	22.9	2.41	8.40(1)	3.18	3.18	16	1.24	41.4	50.8
1/4	22.9	3.02	11.20(1)	3.18	3.18	16	1.24	41.4	50.8
3/8	22.9	3.20	14.60(1)	3.43	3.43	14	1.37	46.0	55.9
1/2	27.7	3.73	17.27	3.68	3.68	14	1.50	49.0	58.4
3/4	33.5	3.91	21.59	4.06	4.06	11	1.68	56.9	66.0
1	41.4	4.55	27.94	4.57	4.45	11	1.85	62.0	78.7
1-1/4	50.5	4.85	35.56	5.33	5.21	10	2.13	71.1	94.0
1-1/2	57.2	5.08	41.40	5.84	5.59	10	2.31	76.5	111.8
2	70.1	5.54	52.33	6.60	6.35	10	2.69	86.1	132.1
2-1/2	85.3	7.01	64.52	7.49	7.11	8	3.07	102.4	149.9
3	102.4	7.62	77.47	8.26	8.00	8	3.53	109.0	175.3

(1) 1/8”、1/4”、3/8” Dimension D is according to the Both-Well machining standard.

SOCKET WELD END UNION

MSS SP-83-2018

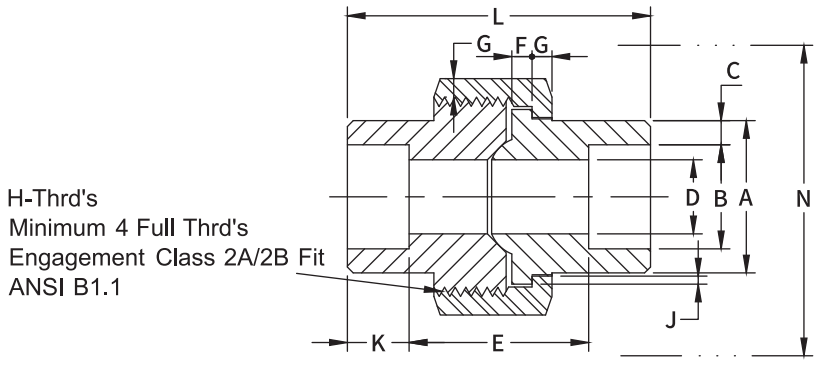

3000Lb

Dimensions are in millimeters.

Nom. Pipe Size	*Pipe End* *A*	*Socket Bore Dia.* *B*	*Socket Wall* *C*	*Water Way Bore* *D*	*Laying Length* *E*	*Male Flange* *(Min)* *F*	*Nut* *(Min)* *G*	*Thrds. Per 25.4mm* *H*	*Bearing* *(Min)* *J*	*Depth of Socket* *K*	*Length Assem. Nom.* *L*	*Clear Assem. Nut* *N*
1/8	25.9	10.9	3.18	6.9	20.70	3.18	3.18	16	1.24	10.5	41.4	50.8
1/4	25.9	14.3	3.30	9.3	20.70	3.18	3.18	16	1.24	10.5	41.4	50.8
3/8	25.9	17.7	3.51	12.6	23.75	3.43	3.43	14	1.37	10.5	46.0	55.9
1/2	31.2	21.9	4.09	15.8	23.75	3.68	3.68	14	1.50	12.5	49.0	58.4
3/4	37.1	27.3	4.27	21.0	28.60	4.06	4.06	11	1.68	14.0	56.9	66.0
1	45.5	34.0	4.98	26.7	30.25	4.57	4.45	11	1.85	15.0	62.0	78.7
1-1/4	54.9	42.8	5.28	35.1	36.55	5.33	5.21	10	2.13	17.0	71.1	94.0
1-1/2	61.5	48.9	5.54	40.9	38.10	5.84	5.59	10	2.31	17.5	76.5	111.8
2	75.2	61.3	6.05	52.5	41.40	6.60	6.35	10	2.69	22.0	86.1	132.1
2-1/2	91.7	74.0	7.67	62.7	56.90	7.49	7.11	8	3.07	25.0	102.4	149.9
3	109.2	90.0	8.31	78.0	58.70	8.26	8.00	8	3.53	25.0	109.0	175.3

THREADED END UNION

MSS SP-83-2018

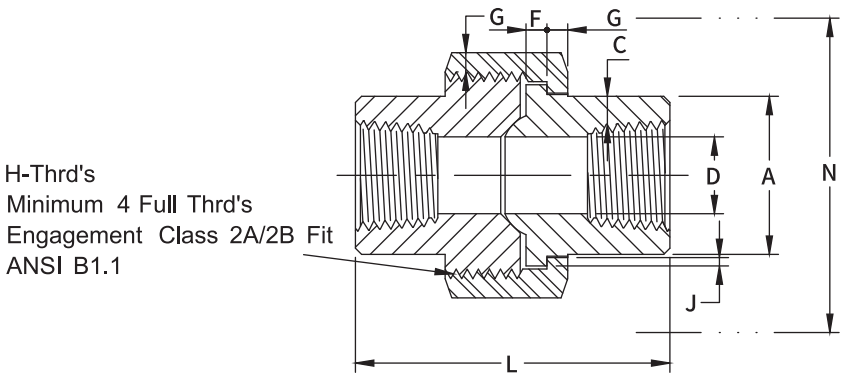

6000Lb

Dimensions are in millimeters.

Nom. Pipe Size	Pipe End A	Wall (Min) C	Water Way Bore D	Male Flange (Min) F	Nut (Min) G	Thrds. Per 25.4mm H	Bearing (Min) J	Length Assem. Nom. L	Clear Assem. Nut N
1/8	22.9	3.15	6.63	3.18	3.18	16	1.24	41.4	50.8
1/4	22.9	3.68	9.65	3.43	3.43	14	1.37	46.0	55.9
3/8	27.7	4.01	13.72	3.68	3.68	14	1.50	49.0	58.4
1/2	33.5	4.78	17.27	4.06	4.06	11	1.68	56.9	66.0
3/4	41.4	5.56	21.59	4.57	4.45	11	1.85	62.0	78.7
1	50.5	6.35	27.94	5.33	5.21	10	2.13	71.1	94.0
1-1/4	57.2	6.35	35.56	5.84	5.59	10	2.31	76.5	111.8
1-1/2	70.1	7.14	41.40	6.60	6.35	10	2.69	86.1	132.1
2	85.3	8.74	51.00	7.49	7.11	8	3.07	102.4	149.9
2-1/2	102.4	9.53	53.80	8.26	8.00	8	3.53	109.0	175.3

SOCKET WELD END UNION

MSS SP-83-2018

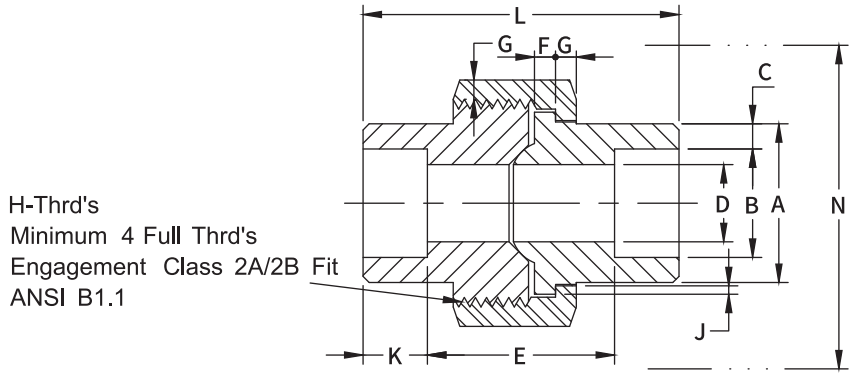

6000Lb

Dimensions are in millimeters.

Nom. Pipe Size	*Pipe End* *A*	*Socket Bore Dia.* *B*	*Socket Wall (Min)* *C*	*Water Way Bore* *D*	*Laying Length* *E*	*Male Flange (Min)* *F*	*Nut (Min)* *G*	*Thrds. Per 25.4mm* *H*	*Bearing (Min)* *J*	*Depth of Socket* *K*	*Length Assem. Nom.* *L*	*Clear Assem. Nut* *N*
1/8	25.9	10.9	3.18	4.0	20.70	3.18	3.18	16	1.24	10.5	41.4	50.8
1/4	25.9	14.3	3.30	6.4	23.75	3.18	3.18	16	1.24	10.5	41.4	50.8
3/8	31.2	17.7	3.51	9.2	23.75	3.43	3.43	14	1.37	12.5	46.0	55.9
1/2	37.1	21.9	4.09	11.8	28.60	3.68	3.68	14	1.50	14.0	49.0	58.4
3/4	45.5	27.3	4.27	15.6	30.25	4.06	4.06	11	1.68	15.0	56.9	66.0
1	54.9	34.0	4.98	20.7	36.55	4.57	4.45	11	1.85	17.0	62.0	78.7
1-1/4	61.5	42.8	5.28	29.5	38.10	5.33	5.21	10	2.13	17.5	71.1	94.0
1-1/2	75.2	48.9	5.54	34.0	41.40	5.84	5.59	10	2.31	22.0	76.5	111.8
2	91.7	61.3	6.05	42.9	56.90	6.60	6.35	10	2.69	25.0	86.1	132.1
2-1/2	109.2	74.0	7.67	53.8	58.70	7.49	7.11	8	3.07	25.0	102.4	149.9

REDUCER INSERT

MSS SP-79-2018

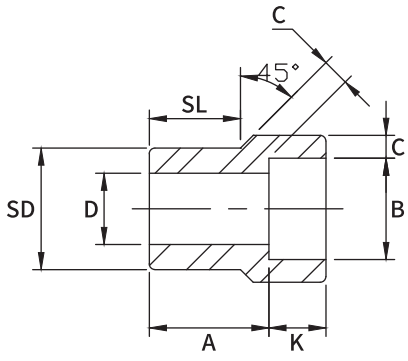

TYPE 1

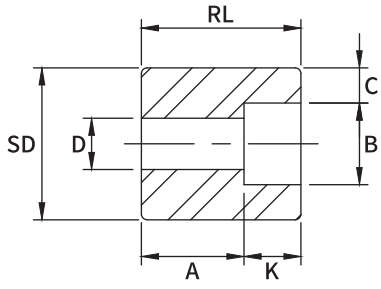

TYPE 2[1]

Dimensions are in millimeters.

Nom.Pipe Size	Type[2]	Socket		Shank Dia	Laying Length	Bore	Wall	Length	
		Dia	Depth		A	D	C	SL	RL
	3M	B	K	SD	3M	3M	3M	3M	3M
1/4×1/8	1	11.0	10.5	13.7	19.0	6.9	3.18	14.2	—
3/8×1/4	1	14.4	10.5	17.1	19.0	9.2	3.78	14.2	—
3/8×1/8	1	11.0	10.5	17.1	19.0	6.9	3.18	14.2	—
1/2×3/8	1	17.8	10.5	21.3	20.6	12.5	4.01	15.7	—
1/2×1/4	1	14.4	10.5	21.3	20.6	9.2	3.78	15.7	—
1/2×1/8	1	11.0	10.5	21.3	20.6	6.9	3.18	15.7	—
3/4×1/2	1	22.0	12.5	26.7	22.4	15.8	4.67	17.5	—
3/4×3/8	2	17.8	10.5	26.7	15.7	12.5	4.01	—	26.9
3/4×1/4	2	14.4	10.5	26.7	17.5	9.2	3.78	—	26.9
3/4×1/8	2	11.0	10.5	26.7	17.5	6.9	3.18	—	26.9
1×3/4	1	27.4	14.0	33.4	23.9	20.9	4.90	19.0	—
1×1/2	2	22.0	12.5	33.4	15.7	15.8	4.67	—	28.4
1×3/8	2	17.8	10.5	33.4	17.5	12.5	4.01	—	28.4
1×1/4	2	14.4	10.5	33.4	19.0	9.2	3.78	—	28.4
1×1/8	2	11.0	10.5	33.4	19.0	6.9	3.18	—	28.4
1-1/4×1	1	34.1	15.0	42.2	25.4	26.6	5.69	20.6	—
1-1/4×3/4	2	27.4	14.0	42.2	17.5	20.9	4.90	—	31.7
1-1/4×1/2	2	22.0	12.5	42.2	19.0	15.8	4.67	—	31.7
1-1/4×3/8	2	17.8	10.5	42.2	20.6	12.5	4.01	—	31.7
1-1/4×1/4	2	14.4	10.5	42.2	22.4	9.2	3.78	—	31.7
1-1/4×1/8	2	11.0	10.5	42.2	22.4	6.9	3.18	—	31.7
1-1/2×1-1/4	1	42.9	17.0	48.2	28.4	35.0	6.07	22.4	—
1-1/2×1	2	34.1	15.0	48.2	17.5	26.6	5.69	—	33.2
1-1/2×3/4	2	27.4	14.0	48.2	19.0	20.9	4.90	—	33.2
1-1/2×1/2	2	22.0	12.5	48.2	20.6	15.8	4.67	—	33.2
1-1/2×3/8	2	17.8	10.5	48.2	22.4	12.5	4.01	—	33.2
1-1/2×1/4	2	14.4	10.5	48.2	22.4	9.2	3.78	—	33.2
1-1/2×1/8	2	11.0	10.5	48.2	22.4	6.9	3.18	—	33.2
2×1-1/2	1	49.0	17.5	60.3	31.8	40.8	6.35	25.4	—
2×1-1/4	2	42.9	17.0	60.3	20.6	35.0	6.07	—	38.1
2×1	2	34.1	15.0	60.3	22.4	26.6	5.69	—	38.1

(1) At the option of the manufacturer Type 2 Reducers may be furnished in Type 1 configuration.
(2) 3M & 6M symbols denote 3000 and 6000 classes.

REDUCER INSERT

MSS SP-79-2018

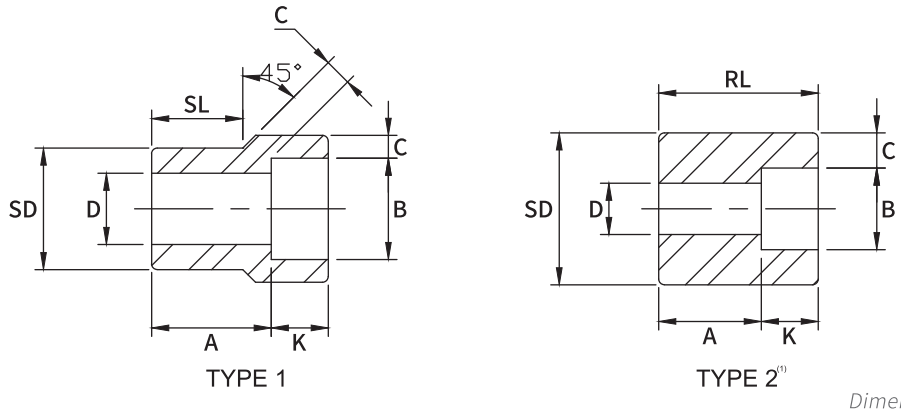

TYPE 1 TYPE 2[1]

(Continued)

Dimensions are in millimeters.

Nom.Pipe Size	Type[2]	Socket		Shank Dia	Laying Length	Bore	Wall	Length	
		Dia	Depth		A	D	C	SL	RL
	3M	B	K	SD	3M	3M	3M	3M	3M
2×3/4	2	27.4	14.0	60.3	23.9	20.9	4.90	—	38.1
2×1/2	2	22.0	12.5	60.3	25.4	15.8	4.67	—	38.1
2×3/8	2	17.8	10.5	60.3	26.9	12.5	4.01	—	38.1
2×1/4	2	14.4	10.5	60.3	26.9	9.2	3.78	—	38.1
2×1/8	2	11.0	10.5	60.3	26.9	6.9	3.18	—	38.1
2-1/2×2	1	61.4	22.0	73.0	46.0	52.4	6.93	38.1	—
2-1/2×1-1/2	2	49.0	17.5	73.0	35.0	40.8	6.35	—	53.8
2-1/2×1-1/4	2	42.9	17.0	73.0	36.6	35.0	6.07	—	53.8
2-1/2×1	2	34.1	15.0	73.0	38.1	26.6	5.69	—	53.8
2-1/2×3/4	2	27.4	14.0	73.0	39.6	20.9	4.90	—	53.8
2-1/2×1/2	2	22.0	12.5	73.0	41.4	15.8	4.67	—	53.8
2-1/2×3/8	2	17.8	10.5	73.0	42.9	12.5	4.01	—	53.8
2-1/2×1/4	2	14.4	10.5	73.0	42.9	9.2	3.78	—	53.8
2-1/2×1/8	2	11.0	10.5	73.0	42.9	6.9	3.18	—	53.8
3×2-1/2	1	74.1	22.0	88.9	38.1	62.7	8.76	31.8	—
3×2	2	61.4	22.0	88.9	25.4	52.4	6.93	—	47.4
3×1-1/2	2	49.0	17.5	88.9	28.4	40.8	6.35	—	47.4
3×1-1/4	2	42.9	17.0	88.9	30.2	35.0	6.07	—	47.4
3×1	2	34.1	15.0	88.9	31.8	26.6	5.69	—	47.4
3×3/4	2	27.4	14.0	88.9	33.3	20.9	4.90	—	47.4
3×1/2	2	22.0	12.5	88.9	35.1	15.8	4.67	—	47.4
3×3/8	2	17.8	10.5	88.9	36.6	12.5	4.01	—	47.4
3×1/4	2	14.4	10.5	88.9	36.6	9.2	3.78	—	47.4
3×1/8	2	11.0	10.5	88.9	36.6	6.9	3.18	—	47.4

(1) At the option of the manufacturer Type 2 Reducers may be furnished in Type 1 configuration.
(2) 3M & 6M symbols denote 3000 and 6000 classes.

REDUCER INSERT

MSS SP-79-2018

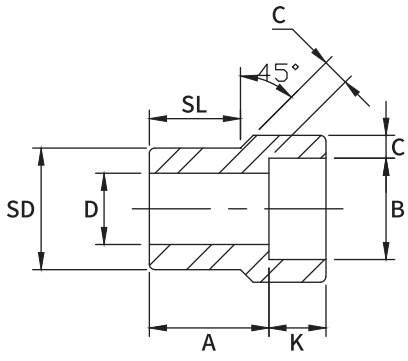

TYPE 1

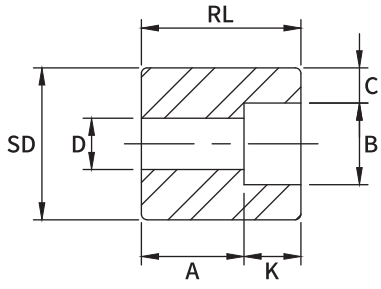

TYPE 2[1]

Dimensions are in millimeters.

Nom.Pipe Size	Type[2]	Socket		Shank Dia	Laying Length	Bore	Wall	Length	
		Dia	Depth		A	D	C	SL	RL
	3M	B	K	SD	3M	3M	3M	3M	3M
4×3	2	90.0	27.0	114.3	33.3	77.9	9.52	–	60.4
4×2-1/2	2	74.1	22.0	114.3	38.1	62.7	8.76	–	60.4
4×2	2	61.4	22.0	114.3	38.1	52.4	6.93	–	60.4
4×1-1/2	2	49.0	17.5	114.3	41.1	40.8	6.35	–	60.4
4×1-1/4	2	42.9	17.0	114.3	42.9	35.0	6.07	–	60.4
4×1	2	34.1	15.0	114.3	44.5	26.6	5.69	–	60.4
4×3/4	2	27.4	14.0	114.3	46.0	20.9	4.90	–	60.4
4×1/2	2	22.0	12.5	114.3	47.8	15.8	4.67	–	60.4
4×3/8	2	17.8	10.5	114.3	49.3	12.5	4.01	–	60.4
4×1/4	2	14.4	10.5	114.3	49.3	9.2	3.78	–	60.4
4×1/8	2	11.0	10.5	114.3	49.3	6.9	3.18	–	60.4

(1) At the option of the manufacturer Type 2 Reducers may be furnished in Type 1 configuration.
(2) 3M & 6M symbols denote 3000 and 6000 classes.

DIMENSIONAL TOLERANCES OF REDUCER INSERT

MSS SP-79-2018 *Unit : mm*

	1/8	1/4	3/8	1/2	3/4	1	1-1/4	1-1/2	2	2-1/2	3	4
Laying length (A)		+1.5 -0.0				+2.0 -0.0				+2.5 -0.0		
Socket Dia (B)	±0.20									+0.3 -0.2		
Bore (D)	±0.8									±1.5		
Shank Dia (SD)		±0.3							±0.5			±0.8
Shank Length (SL)		+0.0 -1.5				+0.0 -2.0				+0.0 -2.5		

REDUCER INSERT

MSS SP-79-2018

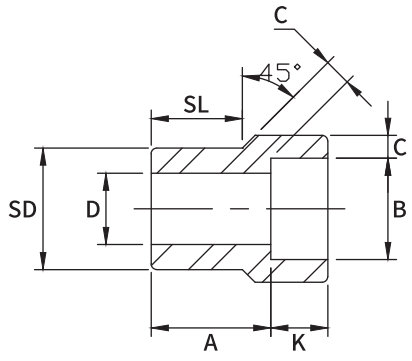

TYPE 1

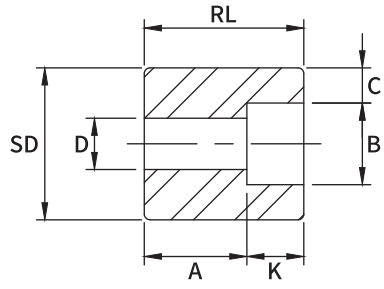

TYPE 2[1]

Dimensions are in millimeters.

Nom.Pipe Size	Type[2]	Socket		Shank Dia	Laying Length A	Bore D	Wall C	Length	
		Dia B	Depth K					SL	RL
	6M			SD	6M	6M	6M	6M	6M
1/4×1/8	1	11.0	10.5	13.7	21.3	4.0	3.96	15.7	—
3/8×1/4	1	14.4	10.5	17.1	21.3	6.3	4.60	15.7	—
3/8×1/8	1	11.0	10.5	17.1	21.3	4.0	3.96	15.7	—
1/2×3/8	1	17.8	10.5	21.3	23.0	9.1	5.03	15.7	—
1/2×1/4	1	14.4	10.5	21.3	20.6	6.3	4.60	15.7	—
1/2×1/8	1	11.0	10.5	21.3	20.6	4.0	3.96	15.7	—
3/4×1/2	1	22.0	12.5	26.7	25.4	11.7	5.97	19.0	—
3/4×3/8	1	17.8	10.5	26.7	22.4	9.1	5.03	19.0	—
3/4×1/4	2	14.4	10.5	26.7	22.4	6.3	4.60	—	32.0
3/4×1/8	2	11.0	10.5	26.7	22.4	4.0	3.96	—	32.0
1×3/4	1	27.4	14.0	33.4	28.4	15.5	6.96	20.6	—
1×1/2	1	22.0	12.5	33.4	28.4	11.7	5.97	20.6	—
1×3/8	2	17.8	10.5	33.4	22.4	9.1	5.03	—	33.2
1×1/4	2	14.4	10.5	33.4	23.9	6.3	4.60	—	33.2
1×1/8	2	11.0	10.5	33.4	23.9	4.0	3.96	—	33.2
1-1/4×1	1	34.1	15.0	42.2	30.2	20.7	7.92	22.4	—
1-1/4×3/4	2	27.4	14.0	42.2	20.6	15.5	6.96	—	34.7
1-1/4×1/2	2	22.0	12.5	42.2	22.4	11.7	5.97	—	34.7
1-1/4×3/8	2	17.8	10.5	42.2	23.9	9.1	5.03	—	34.7
1-1/4×1/4	2	14.4	10.5	42.2	25.4	6.3	4.60	—	34.7
1-1/4×1/8	2	11.0	10.5	42.2	25.4	4.0	3.96	—	34.7
1-1/2×1-1/4	1	42.9	17.0	48.2	35.0	29.4	7.92	25.4	—
1-1/2×1	1	34.1	15.0	48.2	29.2	20.7	7.92	25.4	—
1-1/2×3/4	2	27.4	14.0	48.2	25.4	15.5	6.96	—	39.6
1-1/2×1/2	2	22.0	12.5	48.2	26.9	11.7	5.97	—	39.6
1-1/2×3/8	2	17.8	10.5	48.2	28.4	9.1	5.03	—	39.6
1-1/2×1/4	2	14.4	10.5	48.2	28.4	6.3	4.60	—	39.6
1-1/2×1/8	2	11.0	10.5	48.2	28.4	4.0	3.96	—	39.6
2×1-1/2	1	49.0	17.5	60.3	38.9	33.9	8.92	28.7	—
2×1-1/4	2	42.9	17.0	60.3	23.9	29.4	7.92	—	41.1
2×1	2	34.1	15.0	60.3	25.4	20.7	7.92	—	41.1

(1) At the option of the manufacturer Type 2 Reducers may be furnished in Type 1 configuration.
(2) 3M & 6M symbols denote 3000 and 6000 classes.

REDUCER INSERT

MSS SP-79-2018

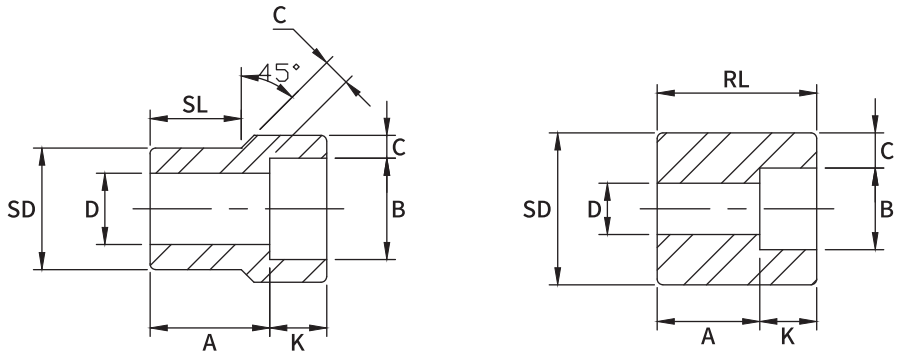

TYPE 1 TYPE 2[1]

(Continued)

Dimensions are in millimeters.

Nom.Pipe Size	Type[2]	Socket		Shank Dia	Laying Length	Bore	Wall	Length	
		Dia	Depth		A	D	C	SL	RL
	6M	B	K	SD	6M	6M	6M	6M	6M
2×3/4	2	27.4	14.0	60.3	26.9	15.5	6.96	—	41.1
2×1/2	2	22.0	12.5	60.3	28.4	11.7	5.97	—	41.1
2×3/8	2	17.8	10.5	60.3	30.2	9.1	5.03	—	41.1
2×1/4	2	14.4	10.5	60.3	30.2	6.3	4.60	—	41.1
2×1/8	2	11.0	10.5	60.3	30.2	4.0	3.96	—	41.1
2-1/2×2	1	61.4	22.0	73.0	42.7	42.8	10.92	31.8	—
2-1/2×1-1/2	2	49.0	17.5	73.0	35.0	33.9	8.92	—	53.8
2-1/2×1-1/4	2	42.9	17.0	73.0	36.6	29.4	7.92	—	53.8
2-1/2×1	2	34.1	15.0	73.0	38.1	20.7	7.92	—	53.8
2-1/2×3/4	2	27.4	14.0	73.0	38.1	15.5	6.96	—	53.8
2-1/2×1/2	2	22.0	12.5	73.0	38.1	11.7	5.97	—	53.8
2-1/2×3/8	2	17.8	10.5	73.0	39.6	9.1	5.03	—	53.8
2-1/2×1/4	2	14.4	10.5	73.0	39.6	6.3	4.60	—	53.8
2-1/2×1/8	2	11.0	10.5	73.0	39.6	4.0	3.96	—	53.8
3×2-1/2	1	74.1	22.0	88.9	57.2	54.0	11.91	44.4	—
3×2	2	61.4	22.0	88.9	31.8	42.8	10.92	—	53.8
3×1-1/2	2	49.0	22.0	88.9	31.8	33.9	8.92	—	53.8
3×1-1/4	2	42.9	22.0	88.9	31.8	29.4	7.92	—	53.8
3×1	2	34.1	22.0	88.9	31.8	20.7	7.92	—	53.8
3×3/4	2	27.4	14.0	88.9	42.9	15.5	6.96	—	53.8
3×1/2	2	22.0	12.5	88.9	44.5	11.7	5.97	—	53.8
3×3/8	2	17.8	10.5	88.9	46.0	9.1	5.03	—	53.8
3×1/4	2	14.4	10.5	88.9	46.0	6.3	4.60	—	53.8
3×1/8	2	11.0	10.5	88.9	46.0	4.0	3.96	—	53.8

(1) At the option of the manufacturer Type 2 Reducers may be furnished in Type 1 configuration.
(2) 3M & 6M symbols denote 3000 and 6000 classes.

REDUCER INSERT

MSS SP-79-2018

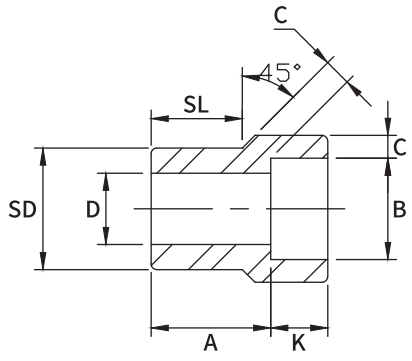

TYPE 1

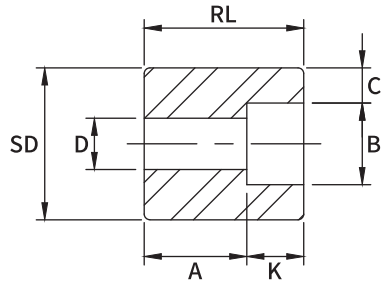

TYPE 2[1]

Dimensions are in millimeters.

Nom.Pipe Size	Type[2]	Socket		Shank Dia	Laying Length A	Bore D	Wall C	Length	
		Dia B	Depth K	SD				SL	RL
	6M	6M	6M	6M	6M	6M	6M	6M	6M
4×3	1	90.0	22.0	114.3	65.0	66.7	13.92	44.5	–
4×2-1/2	2	74.1	22.0	114.3	50.8	54.0	11.91	–	73.2
4×2	2	61.4	22.0	114.3	50.8	42.8	10.92	–	73.2
4×1-1/2	2	49.0	17.5	114.3	54.1	33.9	8.92	–	73.2
4×1-1/4	2	42.9	17.0	114.3	55.6	29.4	7.92	–	73.2
4×1	2	34.1	15.0	114.3	57.2	20.7	7.92	–	73.2
4×3/4	2	27.4	14.0	114.3	58.7	15.5	6.96	–	73.2
4×1/2	2	22.0	12.5	114.3	60.5	11.7	5.97	–	73.2
4×3/8	2	17.8	10.5	114.3	62.0	9.1	5.03	–	73.2
4×1/4	2	14.4	10.5	114.3	62.0	6.3	4.60	–	73.2
4×1/8	2	11.0	10.5	114.3	62.0	4.0	3.96	–	73.2

(1) At the option of the manufacturer Type 2 Reducers may be furnished in Type 1 configuration.
(2) 3M & 6M symbols denote 3000 and 6000 classes.

DIMENSIONAL TOLERANCES OF REDUCER INSERT

MSS SP-79-2018 *Unit : mm*

	1/8	1/4	3/8	1/2	3/4	1	1-1/4	1-1/2	2	2-1/2	3	4
Laying length (A)		+1.5 -0.0				+2.0 -0.0				+2.5 -0.0		
Socket Dia (B)	±0.20									+0.3 -0.2		
Bore (D)	±0.8									±1.5		
Shank Dia (SD)		±0.3							±0.5			±0.8
Shank Length (SL)		+0.0 -1.5				+0.0 -2.0				+0.0 -2.5		

SWAGED NIPPLE

MSS SP-95-2018

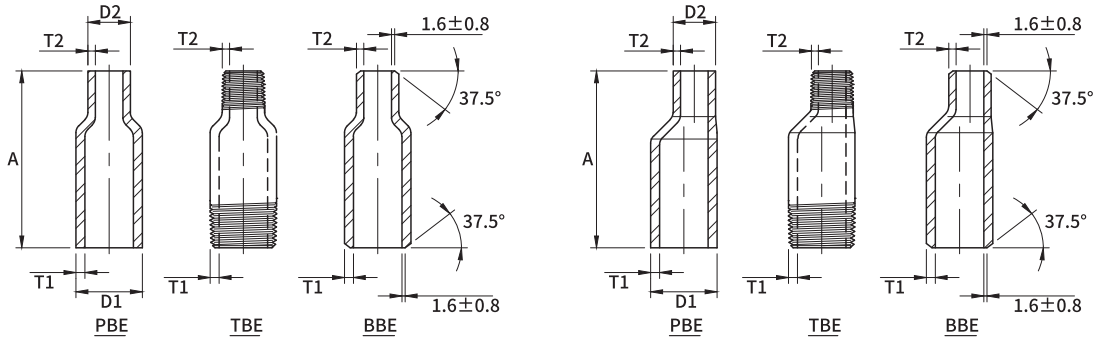

Dimensions are in millimeters.

Nom.Pipe Size	Outside Diameter		End to End "A"	Wall Thickness							
				T1				T2			
	Large End D1	Small End D2		Sch40 (STD)	Sch80 (XS)	Sch160	XXS	Sch40 (STD)	Sch80 (XS)	Sch160	XXS
1/4×1/8	13.7	10.3	57	2.2	3.0	3.7	6.1	1.7	2.4	—	—
3/8×1/8	17.1	10.3	64	2.3	3.2	4.0	6.4	1.7	2.4	—	—
3/8×1/4	17.1	13.7	64	2.3	3.2	4.0	6.4	2.2	3.0	—	—
1/2×1/8	21.3	10.3	70	2.8	3.7	4.8	7.5	1.7	2.4	—	—
1/2×1/4	21.3	13.7	70	2.8	3.7	4.8	7.5	2.2	3.0	—	
1/2×3/8	21.3	17.1	70	2.8	3.7	4.8	7.5	2.3	3.2	—	—
3/4×1/8	26.7	10.3	76	2.9	3.9	5.6	7.8	1.7	2.4	—	—
3/4×1/4	26.7	13.7	76	2.9	3.9	5.6	7.8	2.2	3.0	—	—
3/4×3/8	26.7	17.1	76	2.9	3.9	5.6	7.8	2.3	3.2	—	—
3/4×1/2	26.7	21.3	76	2.9	3.9	5.6	7.8	2.8	3.7	4.8	7.5
1×1/8	33.4	10.3	89	3.4	4.5	6.4	9.1	1.7	2.4	—	—
1×1/4	33.4	13.7	89	3.4	4.5	6.4	9.1	2.2	3.0	—	—
1×3/8	33.4	17.1	89	3.4	4.5	6.4	9.1	2.3	3.2	—	—
1×1/2	33.4	21.3	89	3.4	4.5	6.4	9.1	2.8	3.7	4.8	7.5
1×3/4	33.4	26.7	89	3.4	4.5	6.4	9.1	2.9	3.9	5.6	7.8
1-1/4×1/8	42.2	10.3	102	3.6	4.9	6.4	9.7	1.7	2.4	—	—
1-1/4×1/4	42.2	13.7	102	3.6	4.9	6.4	9.7	2.2	3.0	—	—
1-1/4×3/8	42.2	17.1	102	3.6	4.9	6.4	9.7	2.3	3.2	—	—
1-1/4×1/2	42.2	21.3	102	3.6	4.9	6.4	9.7	2.8	3.7	4.8	7.5
1-1/4×3/4	42.2	26.7	102	3.6	4.9	6.4	9.7	2.9	3.9	5.6	7.8
1-1/4×1	42.2	33.4	102	3.6	4.9	6.4	9.7	3.4	4.5	6.4	9.1
1-1/2×1/8	48.3	10.3	114	3.7	5.1	7.1	10.2	1.7	2.4	—	—
1-1/2×1/4	48.3	13.7	114	3.7	5.1	7.1	10.2	2.2	3.0	—	—
1-1/2×3/8	48.3	17.1	114	3.7	5.1	7.1	10.2	2.3	3.2	—	—
1-1/2×1/2	48.3	21.3	114	3.7	5.1	7.1	10.2	2.8	3.7	4.8	7.5
1-1/2×3/4	48.3	26.7	114	3.7	5.1	7.1	10.2	2.9	3.9	5.6	7.8
1-1/2×1	48.3	33.4	114	3.7	5.1	7.1	10.2	3.4	4.5	6.4	9.1
1-1/2×1-1/4	48.3	42.2	114	3.7	5.1	7.1	10.2	3.6	4.9	6.4	9.7
2×1/8	60.3	10.3	165	3.9	5.5	8.7	11.1	1.7	2.4	—	—
2×1/4	60.3	13.7	165	3.9	5.5	8.7	11.1	2.2	3.0	—	—
2×3/8	60.3	17.1	165	3.9	5.5	8.7	11.1	2.3	3.2	—	—
2×1/2	60.3	21.3	165	3.9	5.5	8.7	11.1	2.8	3.7	4.8	7.5
2×3/4	60.3	26.7	165	3.9	5.5	8.7	11.1	2.9	3.9	5.6	7.8
2×1	60.3	33.4	165	3.9	5.5	8.7	11.1	3.4	4.5	6.4	9.1
2×1-1/4	60.3	42.2	165	3.9	5.5	8.7	11.1	3.6	4.9	6.4	9.7
2×1-1/2	60.3	48.3	165	3.9	5.5	8.7	11.1	3.7	5.1	7.1	10.2
2-1/2×1/8	73.0	10.3	178	5.2	7.0	9.5	14.0	1.7	2.4	—	—
2-1/2×1/4	73.0	13.7	178	5.2	7.0	9.5	14.0	2.2	3.0	—	—
2-1/2×3/8	73.0	17.1	178	5.2	7.0	9.5	14.0	2.3	3.2	—	—
2-1/2×1/2	73.0	21.3	178	5.2	7.0	9.5	14.0	2.8	3.7	4.8	7.5
2-1/2×3/4	73.0	26.7	178	5.2	7.0	9.5	14.0	2.9	3.9	5.6	7.8
2-1/2×1	73.0	33.4	178	5.2	7.0	9.5	14.0	3.4	4.5	6.4	9.1

SWAGED NIPPLE

MSS SP-95-2018

(Continued) *Dimensions are in millimeters.*

Nom.Pipe Size	Outside Diameter		End to End "A"	Wall Thickness							
				T1				T2			
	Large End D1	Small End D2		Sch40 (STD)	Sch80 (XS)	Sch160	XXS	Sch40 (STD)	Sch80 (XS)	Sch160	XXS
2-1/2×1-1/4	73.0	42.2	178	5.2	7.0	9.5	14.0	3.6	4.9	6.4	9.7
2-1/2×1-1/2	73.0	48.3	178	5.2	7.0	9.5	14.0	3.7	5.1	7.1	10.2
2-1/2×2	73.0	60.3	178	5.2	7.0	9.5	14.0	3.9	5.5	8.7	11.1
3×1/8	88.9	10.3	203	5.5	7.6	11.1	15.2	1.7	2.4	—	—
3×1/4	88.9	13.7	203	5.5	7.6	11.1	15.2	2.2	3.0	—	—
3×3/8	88.9	17.1	203	5.5	7.6	11.1	15.2	2.3	3.2	—	—
3×1/2	88.9	21.3	203	5.5	7.6	11.1	15.2	2.8	3.7	4.8	7.5
3×3/4	88.9	26.7	203	5.5	7.6	11.1	15.2	2.9	3.9	5.6	7.8
3×1	88.9	33.4	203	5.5	7.6	11.1	15.2	3.4	4.5	6.4	9.1
3×1-1/4	88.9	42.2	203	5.5	7.6	11.1	15.2	3.6	4.9	6.4	9.7
3×1-1/2	88.9	48.3	203	5.5	7.6	11.1	15.2	3.7	5.1	7.1	10.2
3×2	88.9	60.3	203	5.5	7.6	11.1	15.2	3.9	5.5	8.7	11.1
3×2-1/2	88.9	73.0	203	5.5	7.6	11.1	15.2	5.2	7.0	9.5	14.0
3-1/2×1/8	101.6	10.3	203	5.7	8.1	—	—	1.7	2.4	—	—
3-1/2×1/4	101.6	13.7	203	5.7	8.1	—	—	2.2	3.0	—	—
3-1/2×3/8	101.6	17.1	203	5.7	8.1	—	—	2.3	3.2	—	—
3-1/2×1/2	101.6	21.3	203	5.7	8.1	—	—	2.8	3.7	4.8	7.5
3-1/3×3/4	101.6	26.7	203	5.7	8.1	—	—	2.9	3.9	5.6	7.8
3-1/2×1	101.6	33.4	203	5.7	8.1	—	—	3.4	4.5	6.4	9.1
3-1/2×1-1/4	101.6	42.2	203	5.7	8.1	—	—	3.6	4.9	6.4	9.7
3-1/2×1-1/2	101.6	48.3	203	5.7	8.1	—	—	3.7	5.1	7.1	10.2
3-1/2×2	101.6	60.3	203	5.7	8.1	—	—	3.9	5.5	8.7	11.1
3-1/2×2-1/2	101.6	73.0	203	5.7	8.1	—	—	5.2	7.0	9.5	14.0
3-1/2×3	101.6	88.9	203	5.7	8.1	—	—	5.5	7.6	11.1	15.2
4×1/4	114.3	13.7	229	6.0	8.6	13.5	17.1	2.2	3.0	—	—
4×3/8	114.3	17.1	229	6.0	8.6	13.5	17.1	2.3	3.2	—	—
4×1/2	114.3	21.3	229	6.0	8.6	13.5	17.1	2.8	3.7	4.8	7.5
4×3/4	114.3	26.7	229	6.0	8.6	13.5	17.1	2.9	3.9	5.6	7.8
4×1	114.3	33.4	229	6.0	8.6	13.5	17.1	3.4	4.5	6.4	9.1
4×1-1/4	114.3	42.2	229	6.0	8.6	13.5	17.1	3.6	4.9	6.4	9.7
4×1-1/2	114.3	48.3	229	6.0	8.6	13.5	17.1	3.7	5.1	7.1	10.2
4×2	114.3	60.3	229	6.0	8.6	13.5	17.1	3.9	5.5	8.7	11.1
4×2-1/2	114.3	73.0	229	6.0	8.6	13.5	17.1	5.2	7.0	9.5	14.0
4×3	114.3	88.9	229	6.0	8.6	13.5	17.1	5.5	7.6	11.1	15.2
4×3-1/2	114.3	101.6	229	6.0	8.6	13.5	17.1	5.7	8.1	—	—

(1) Wall Thickness (T1, T2) in Accordance with ASME B36.10M.

PBE:PLAIN BOTH ENDS
PSE:PLAIN SMALL END
PLE:PLAIN LARGE END

BBE:BEVEL BOTH ENDS
BSE:BEVEL SMALL END
BLE:BEVEL LARGE END

TBE:THREAD BOTH ENDS
TSE:THREAD SMALL END
TLE:THREAD LARGE END

DIMENSIONAL TOLERANCES OF SWAGED NIPPLES

MSS SP-95-2018 *Unit : mm*

Nominal Pipe Size (Inch)	Overall Length	Outside Diameter at End		Fitting Wall Thickness (see Note 1)
		Square Cut Ends	Other End Connections	
1/8～3/8	±1.5	+0.4 -0.8	±0.8	Not less than 87.5% of Nominal Wall Thickness
1/2～1-1/2	±1.5	+0.4 -0.8	+1.5 -0.8	
2～2-1/2	±3.0	±0.8	+1.5 -0.8	
3～4	±3.0	±0.8	±1.5	

Note 1 : Prior to threading or grooving

BULL PLUG

MSS SP-95-2018

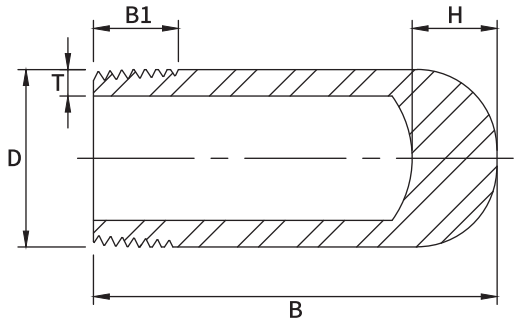

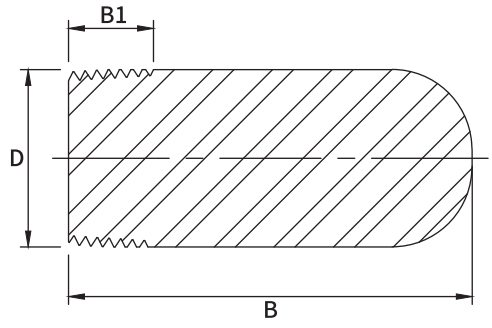

Dimensions are in millimeters.

Nom.Pipe Size	D	B	B1	T (Min)				H
				Sch 40/STD	Sch 80/XS (3M)	Sch160 (6M)	XXS	
1/8	10.3	51	9.5	1.73	2.41	–	–	14
1/4	13.7	51	11.0	2.24	3.02	–	–	14
3/8	17.1	57	12.5	2.31	3.20	–	–	14
1/2	21.3	64	14.5	2.77	3.73	4.78	7.47	14
3/4	26.7	70	16.0	2.87	3.91	5.56	7.82	18
1	33.4	76	19.0	3.38	4.55	6.35	9.09	18
1-1/4	42.2	83	20.5	3.56	4.85	6.35	9.70	18
1-1/2	48.3	89	20.5	3.68	5.08	7.14	10.15	18
2	60.3	102	22.0	3.91	5.54	8.74	11.07	20
2-1/2	73.0	127	27.0	5.16	7.01	9.53	14.02	20
3	88.9	152	28.5	5.49	7.62	11.13	15.24	20
4	114.3	178	32.0	6.02	8.56	13.49	17.12	20

(1) Thread (B1) is According to ASME B1.20.1.
(2) Wall Thickness (T Min.) in accordance with ASME B36.10M

THREADED END 90°BRANCH OUTLET

MSS SP-97-2019

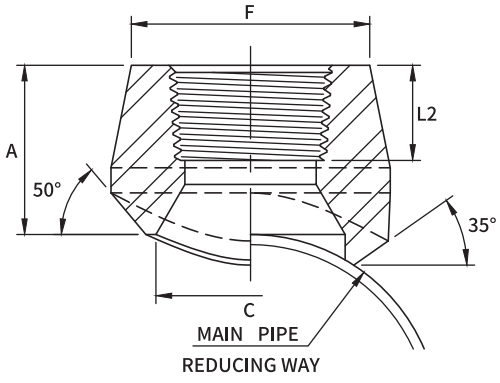

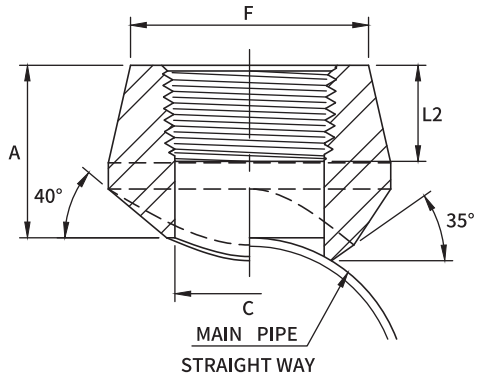

Dimensions are in millimeters.

Reducing way				
OutLet Pipe (in)	A	C	L2	F
3000Lb				
1/8	19.0	13.7	8.8	22.0
1/4	19.0	13.7	11.4	22.0
3/8	20.6	17.1	12.4	25.9
1/2	25.4	21.3	14.9	31.4
3/4	26.9	26.7	16.8	37.1
1	33.3	33.4	19.6	45.5
1-1/4	33.3	42.2	21.9	57.0
1-1/2	35.0	48.3	22.7	64.0
2	38.1	60.3	23.9	76.0
2-1/2	46.0	73.0	30.5	92.0
3	50.8	88.9	32.8	109.2
4	57.2	114.3	34.6	140.0
6000Lb				
1/8	28.7	7.2	8.8	22.0
1/4	28.7	10.2	11.4	25.0
3/8	28.7	13.5	12.4	32.0
1/2	31.8	16.6	14.9	38.0
3/4	36.6	21.2	16.8	44.0
1	39.6	27.0	19.6	57.0
1-1/4	41.1	35.8	21.9	64.0
1-1/2	42.3	41.2	22.7	76.0
2	52.3	51.6	23.9	92.0

(1) Dimension L2 is According to ASME B1.20.1
(2) 3000LB outlet size 4 and less fit a number of run pipe sizes and the fitting are marked accordingly.
See page 36 for conventional run size combination.

Dimensions are in millimeters.

Straight way				
OutLet Pipe (in)	A	C	L2	F
3000Lb				
1/4	19.0	11.5	11.4	22.0
3/8	20.6	14.5	12.4	25.9
1/2	25.4	16.5	14.9	31.4
3/4	26.9	21.5	16.8	37.1
1	33.3	27.2	19.6	45.5
1-1/4	33.3	36.0	21.9	57.0
1-1/2	35.0	42.0	22.7	64.0
2	38.1	53.0	23.9	76.0
2-1/2	46.0	65.0	30.5	92.0
3	50.8	80.0	32.8	109.2
4	57.2	104.0	34.6	140.0

(1) Dimension L2 is According to ASME B1.20.1

Dimensions are in millimeters.

Reducing way				
OutLet Pipe (in)	A	C	L2	F
9000Lb				
1/8	28.7	7.2	8.8	25.0
1/4	28.7	10.2	11.4	32.0
3/8	28.7	13.5	12.4	38.0
1/2	31.8	16.6	14.9	42.0
3/4	36.6	21.2	16.8	48.0
1	39.6	27.0	19.6	57.2
1-1/4	41.1	35.8	21.9	68.0
1-1/2	42.3	41.2	22.7	76.2
2	52.3	51.6	23.9	92.1

SOCKET WELDING END 90°BRANCH OUTLET

MSS SP-97-2019

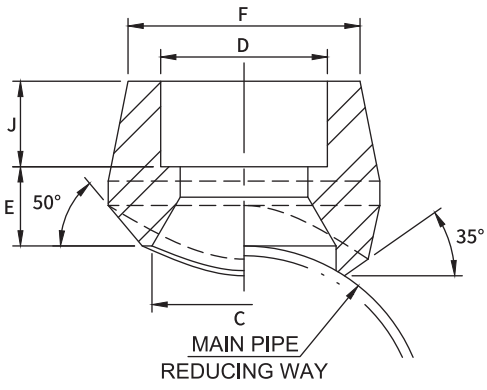

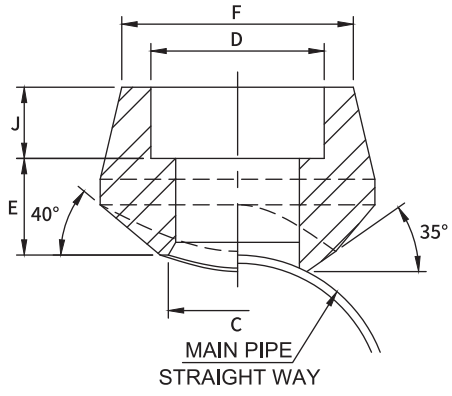

Dimensions are in millimeters.

Reducing way					
OutLet Pipe (in)	C	D	F	J	E
3000Lb					
1/8	13.7	10.8	22.0	10.5	8.5
1/4	13.7	14.2	22.0	10.5	8.5
3/8	19.1	17.6	25.9	10.5	10.5
1/2	21.3	21.8	31.4	12.5	12.5
3/4	26.7	27.2	37.1	14.0	13.0
1	33.4	33.9	45.5	15.0	18.0
1-1/4	42.2	42.7	57.0	17.0	16.0
1-1/2	48.3	48.8	64.0	17.5	17.5
2	60.3	61.2	76.0	22.0	16.0
2-1/2	73.2	73.9	92.0	22.0	24.0
3	88.9	89.8	109.2	22.0	29.0
4	114.3	115.2	140.0	28.0	29.0
6000Lb					
1/8	7.2	10.8	22.0	10.5	18.5
1/4	10.2	14.2	25.0	10.5	18.5
3/8	13.5	17.6	32.0	10.5	18.5
1/2	16.6	21.8	38.0	12.5	19.5
3/4	21.2	27.2	44.0	14.0	23.0
1	27.0	33.9	57.0	15.0	25.0
1-1/4	35.8	42.7	64.0	17.0	24.0
1-1/2	41.2	48.8	76.0	17.5	25.5
2	51.6	61.2	92.0	22.0	30.0

(1) Socket Dimension in Accordance with ASME B16.11.
(2) 3000LB Outlet size 4 and less fit a number of run pipe sizes and the fitting are marked accordingly.
See page 36 for conventional run size combination.

Dimensions are in millimeters.

Straight way					
OutLet Pipe (in)	C	D	F	J	E
3000Lb					
1/4	11.5	14.2	22.0	10.5	8.5
3/8	14.5	17.6	25.9	10.5	10.5
1/2	16.5	21.8	31.4	12.5	12.5
3/4	21.5	27.2	37.1	14.0	13.0
1	27.2	33.9	45.5	15.0	18.0
1-1/4	36.0	42.7	57.0	17.0	16.0
1-1/2	42.0	48.8	64.0	17.5	17.5
2	53.0	61.2	76.0	22.0	16.0
2-1/2	65.0	73.9	92.0	22.0	24.0
3	80.0	89.8	109.2	22.0	29.0
4	104.0	115.2	140.0	28.0	29.0

(1) Socket Dimension in Accordance with ASME B16.11.

Dimensions are in millimeters.

Reducing way					
OutLet Pipe (in)	C	D	F	J	E
9000Lb					
1/2	16.6	21.8	42.0	12.5	19.5
3/4	21.2	27.2	48.0	14.0	23.0
1	27.0	33.9	57.2	15.0	25.0
1-1/4	35.8	42.7	68.0	17.0	24.0
1-1/2	41.2	48.8	76.2	17.5	25.5
2	51.6	61.2	92.1	22.0	30.0

BUTT WELDING END 90°BRANCH OUTLET

MSS SP-97-2019

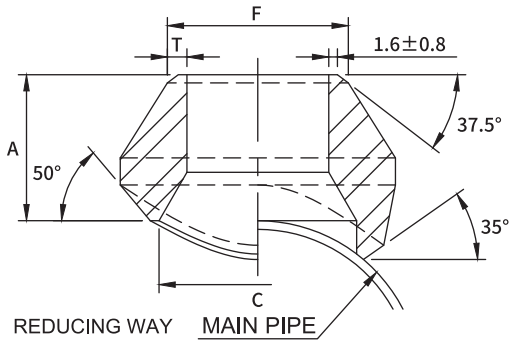

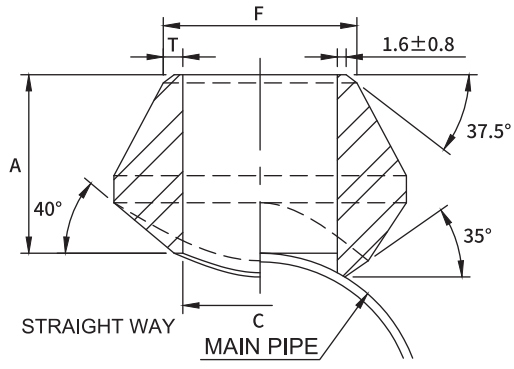

STANDARD

Dimensions are in millimeters.

Reducing way				
OutLet Pipe (in)	A	C	F	T
1/8	16.0	13.7	10.3	1.73
1/4	16.0	13.7	13.7	2.24
3/8	19.0	17.1	17.1	2.31
1/2	19.0	21.3	21.3	2.77
3/4	22.0	26.7	26.7	2.87
1	27.0	33.4	33.4	3.38
1-1/4	32.0	42.2	42.2	3.56
1-1/2	33.0	48.3	48.3	3.68
2	38.0	60.3	60.3	3.91
2-1/2	41.0	73.0	73.0	5.16
3	44.0	88.9	88.9	5.49
3-1/2	48.0	101.6	101.6	5.74
4	51.0	114.3	114.3	6.02
5	57.0	141.3	141.3	6.55
6	60.0	168.3	168.3	7.11
8	70.0	219.1	219.1	8.11
10	78.0	273.1	273.1	9.27
12	86.0	323.9	323.9	9.53
14	89.0	355.6	355.6	9.53
16	94.0	406.4	406.4	9.53
18	97.0	457.0	457.0	9.53
20	102.0	508.0	508.0	9.53
24	116.0	610.0	610.0	9.53

(1) Weld Bevel in Accordance with ASME B16.25.
(2) Outlet size 4 and less fit a number of run pipe sizes and the fittings are marked accordingly. See page 36 for conventional run size combination.
(3) Outlet sizes 5 and up order to specific size combination.

Dimensions are in millimeters.

Straight way				
OutLet Pipe (in)	A	C	F	T
1/4	16.0	11.5	13.7	2.24
3/8	19.0	14.5	17.1	2.31
1/2	19.0	16.5	21.3	2.77
3/4	22.0	21.5	26.7	2.87
1	27.0	27.2	33.4	3.38
1-1/4	32.0	36.0	42.2	3.56
1-1/2	33.0	42.0	48.3	3.68
2	38.0	53.0	60.3	3.91
2-1/2	41.0	65.0	73.0	5.16
3	44.0	80.0	88.9	5.49
4	51.0	104.0	114.3	6.02

(1) Weld Bevel in accordance with ASME B16.25.

DIMENSIONAL TOLERANCE

MSS SP-97-2019 *Unit : mm*

Item	1/8"~3/4"	1"~4"	5"~12"	14"~24"
Face of fitting to Crotch (A)	±0.8	±1.6	±3.2	±4.8

BUTT WELDING END 90°BRANCH OUTLET

MSS SP-97-2019

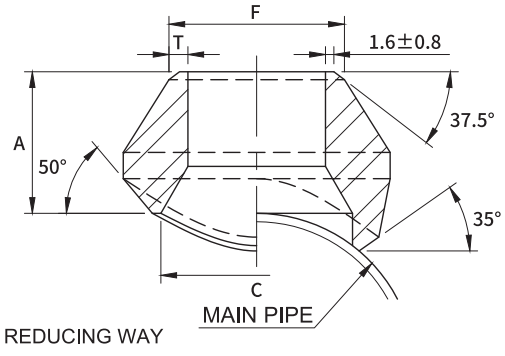

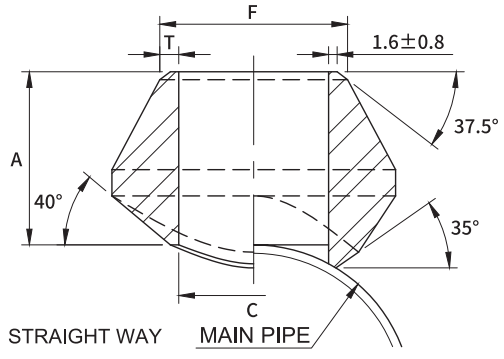

EXTRA STRONG

Dimensions are in millimeters.

Reducing way				
OutLet Pipe (in)	A	C	F	T
1/8	16.0	13.7	10.3	2.41
1/4	16.0	13.7	13.7	3.02
3/8	19.0	17.1	17.1	3.20
1/2	19.0	21.3	21.3	3.73
3/4	22.0	26.7	26.7	3.91
1	27.0	33.4	33.4	4.55
1-1/4	32.0	42.2	42.2	4.85
1-1/2	33.0	48.3	48.3	5.08
2	38.0	60.3	60.3	5.54
2-1/2	41.0	73.0	73.0	7.01
3	44.0	88.9	88.9	7.62
3-1/2	48.0	101.6	101.6	8.56
4	51.0	114.3	114.3	8.56
5	57.0	141.3	141.3	9.53
6	78.0	168.3	168.3	10.97
8	99.0	219.1	219.1	12.70
10	94.0	273.0	273.0	12.70
12	103.0	323.8	323.8	12.70
14	100.0	355.6	355.6	12.70
16	106.0	406.4	406.4	12.70
18	111.0	457.0	457.0	12.70
20	119.0	508.0	508.0	12.70
24	140.0	610.0	610.0	12.70

(1) Weld Bevel in accordance with ASME B16.25.
(2) Outlet size 4 and less fit a number of run pipe sizes and the fittings are marked accordingly. See page 36 for conventional run pipe size combination.
(3) Outlet sizes 5 and up order to specific size combination.

Dimensions are in millimeters.

Straight way				
OutLet Pipe (in)	A	C	F	T
1/4	16.0	11.5	13.7	3.02
3/8	19.0	14.5	17.1	3.20
1/2	19.0	16.5	21.3	3.73
3/4	22.0	21.5	26.7	3.91
1	27.0	27.2	33.4	4.55
1-1/4	32.0	36.0	42.2	4.85
1-1/2	33.0	42.0	48.3	5.08
2	38.0	53.0	60.3	5.54
2-1/2	41.0	65.0	73.0	7.01
3	44.0	80.0	88.9	7.62
4	51.0	104.0	114.3	8.56

(1) Weld Bevel in accordance with ASME B16.25

DIMENSIONAL TOLERANCE

MSS SP-97-2019 *Unit : mm*

Item	1/8"~3/4"	1"~4"	5"~12"	14"~24"
Face of fitting to Crotch (A)	±0.8	±1.6	±3.2	±4.8

BUTT WELDING END 90°BRANCH OUTLET

MSS SP-97-2019

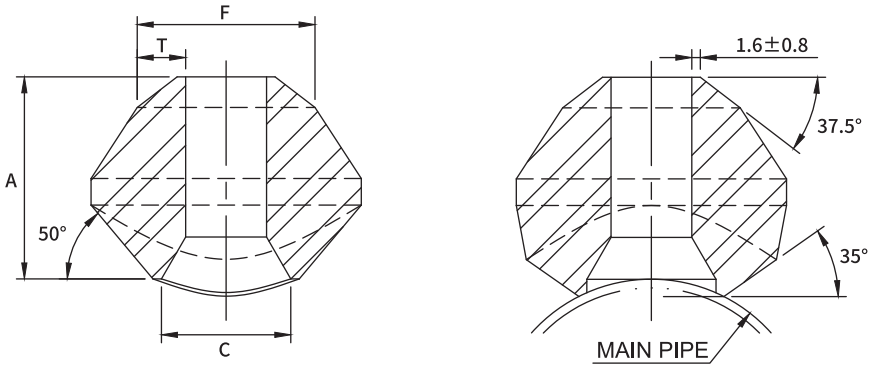

SCHEDULE 160 & DOUBLE EXTRA STRONG

Dimensions are in millimeters.

Reducing way					
OutLet Pipe (in)	A	C	F	T	
				S160	XXS
1/2	28.4	13.8	21.3	4.78	7.47
3/4	31.8	18.9	26.7	5.56	7.82
1	38.1	24.3	33.4	6.35	9.09
1-1/4	44.4	32.5	42.2	6.35	9.70
1-1/2	50.8	38.1	48.3	7.14	10.15
2	55.4	49.2	60.3	8.74	11.07
2-1/2	62.0	59.0	73.0	9.53	14.02
3	73.2	73.7	88.9	11.13	15.24
4	84.1	97.2	114.3	13.49	17.12
5	93.7	122.2	141.3	15.88	19.05
6	104.6	146.4	168.3	18.26	21.95

(1) Weld bevel in accordance with ASME B16.25
(2) Outlet size by order to specific size combination.

CONVENTIONAL RUN PIPE SIZE COMBINATIONS

3000Lb THREAD/SOCKET-WELD END STD/XS BUTT WELDING END

		OUTLET SIZE										
		1/4"	3/8"	1/2"	3/4"	1"	1-1/4"	1-1/2"	2"	2-1/2"	3"	4"
RUN SIZE (MAIN PIPE)	Reducing way	3/8"~3/4" 1"~36"	1/2" 3/4"~1-1/4" 1-1/2"~36"	3/4" 1" 1-1/4" 1-1/2"~3" 3-1/2"~36"	1" 1-1/4" 1-1/2" 2"~3" 3-1/2"~6" 8"~36"	1-1/4" 1-1/2" 2" 2-1/2" 3"~4" 5"~10" 12"~36"	1-1/2" 2" 2-1/2" 3" 3-1/2"~5" 6"~8" 10"~36"	2" 2-1/2" 3" 3-1/2" 4"~5" 6"~10" 12"~36"	2-1/2" 3" 3-1/2" 4" 5"~6" 8"~10" 12"~18" 20"~36"	3" 3-1/2" 4" 5" 6" 8" 10"~14" 16"~36"	3-1/2" 4" 5" 6" 8" 10" 12"~16" 18"~36"	5" 6" 8" 10" 12"~14" 16"~18" 20"~24" 26"~36"
	Straight way	3/8"~36"	1/2"~36"	3/4"~36"	1"~36"	1-1/4"~1-1/2" 2"~36"	1-1/2" 2"~3" 3-1/2"~36"	2" 2-1/2"~4" 5"~36"	2-1/2" 3"~3-1/2" 4"~6" 8"~36"	3" 3-1/2"~4" 5"~8" 10"~36"	3-1/2" 4" 5" 6" 8"~12" 14"~36"	5" 6" 8" 10" 12"~16" 18"~36"

Each charted outlet size is designed to fit a number of run pipe sizes.

SOCKET WELDING 45°BRANCH OUTLET

MSS SP-97-2019

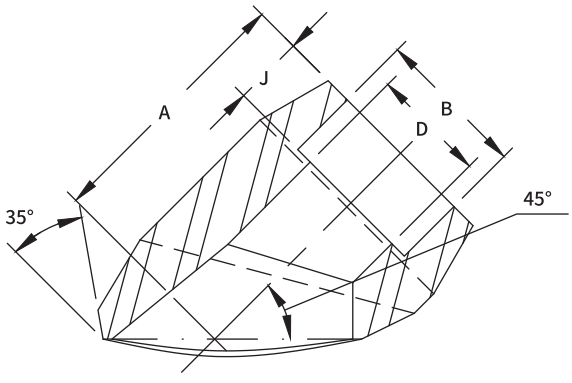

Dimensions are in millimeters.

45°Branch Outlet					
Outlet Pipe		A	B(3)	D(3)	J
DN	IN				

3000Lb

8	1/4	40.5	14.2	9.3	10.0
10	3/8	40.5	17.6	12.6	10.0
15	1/2	40.5	21.8	15.8	11.1
20	3/4	47.6	27.2	21.0	12.7
25	1	55.6	33.9	26.7	13.5
32	1-1/4	62.7	42.7	35.1	15.1
40	1-1/2	66.7	48.8	40.9	15.9
50	2	81.0	61.2	52.5	17.5

6000Lb

8	1/4	40.5	14.2	6.4	10.0
10	3/8	40.5	17.6	9.2	10.0
15	1/2	47.6	21.8	11.8	10.0
20	3/4	55.6	27.2	15.6	14.3
25	1	62.7	33.9	20.7	15.9
32	1-1/4	66.7	42.7	29.5	20.6
40	1-1/2	84.1	48.8	34.0	20.6
50	2	93.7	61.2	42.9	22.0

(1) Socket weld in accordance with ASME B16.11
(2) Dimensions may vary in according to ghe customer and manufacturer requirements.
(3) Tolerance see page 11

THREADED END 45°BRANCH OUTLET

MSS SP-97-2019

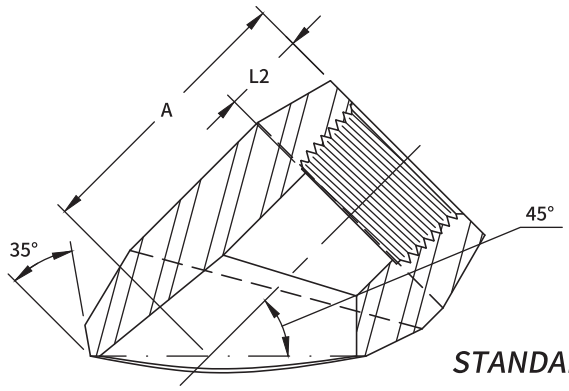

STANDARD WEIGHT & EXTRA STRONG

Dimensions are in millimeters.

45°Branch Outlet				
Outlet Pipe		*A*		*L2*
DN	*IN*	*3000Lb*	*6000Lb*	
8	1/4	40.5	40.5	11.4
10	3/8	40.5	40.5	12.4
15	1/2	40.5	47.6	14.9
20	3/4	47.6	55.6	16.8
25	1	55.6	62.7	19.6
32	1-1/4	62.7	66.7	21.9
40	1-1/2	66.7	84.1	22.7
50	2	81.0	93.7	23.9

(1) Dimension L2 is According to ASME B1.20.1.

BUTT WELDING END 45°BRANCH OUTLET

MSS SP-97-2019

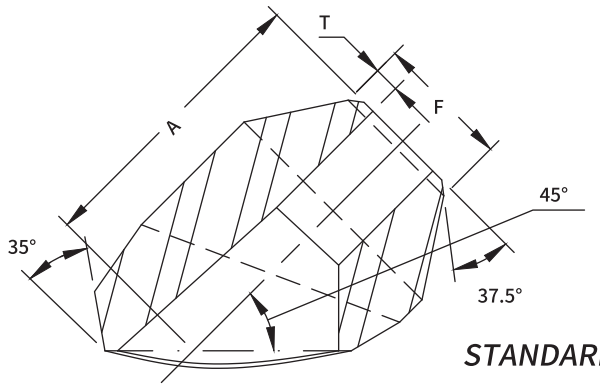

STANDARD WEIGHT & EXTRA STRONG

Dimensions are in millimeters.

45°Branch Outlet					
Outlet Pipe		*A*	*T*		*F*
DN	*IN*		*Sch 40/STD*	*Sch 80/XS*	
8	1/4	40.5	2.24	3.02	13.7
10	3/8	40.5	2.31	3.20	17.1
15	1/2	40.5	2.77	3.73	21.3
20	3/4	47.6	2.87	3.91	26.7
25	1	55.6	3.38	4.55	33.4
32	1-1/4	62.7	3.56	4.85	42.2
40	1-1/2	66.7	3.68	5.08	48.3
50	2	81.0	3.91	5.54	60.3

(1) Weld bevel in accordance with ASME B16.25
(2) Dimensions may vary in according to the customer and manufacturer requirements.
(3) Wall thickness (T) in accordance with ASME B36.10M , ASME B36.19M , see page 50

NIPPLE

ASTM A733-2016

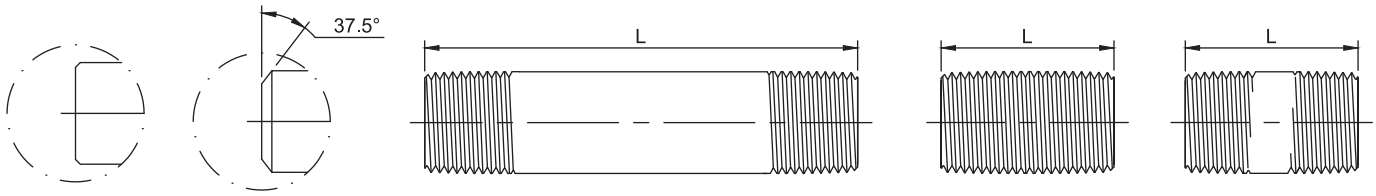

Plain End | Bevel End | Long Nipple | Close Nipple | Short Nipple

Dimensions in Inch. *Plain End Weight (Kg) per meter.*

Nom. Pipe Size	L			Weight			
	Close Nipple	Short Nipple	Long Nipple	Sch 40/STD	Sch 80/XS	Sch 160	XXS
1/8	3/4	1-1/2	2~12	0.37	0.47	-	-
1/4	7/8	1-1/2	2~12	0.63	0.80	-	-
3/8	1	1-1/2	2~12	0.84	1.10	-	-
1/2	1-1/8	1-1/2	2~12	1.27	1.62	1.95	2.55
3/4	1-3/8	1-1/2	2~12	1.69	2.20	2.90	3.64
1	1-1/2	2	2-1/2~12	2.50	3.24	4.24	5.45
1-1/4	1-5/8	2	2-1/2~12	3.39	4.47	5.61	7.77
1-1/2	1-3/4	2	2-1/2~12	4.05	5.41	7.25	9.56
2	2	2-1/2	3~12	5.44	7.48	11.11	13.44
2-1/2	2-1/2	3	3-1/2~12	8.63	11.41	14.92	20.39
3	2-5/8	3	3-1/2~12	11.29	15.27	21.35	27.68
3-1/2	2-3/4	4	4-1/2~12	13.57	18.64	-	-
4	2-7/8	4	4-1/2~12	16.07	22.32	33.54	41.03
5	3	4-1/2	5~12	21.77	30.97	49.12	57.43
6	3-1/8	4-1/2	5~12	28.26	42.56	67.56	79.22

(1) Thread in Accordance with ASME B1.20.1
(2) Weld Bevel in Accordance with ASME B16.25
(3) Weight : in accordance with ASME B36.10M Table 1.

Shape of Threaded

NPT

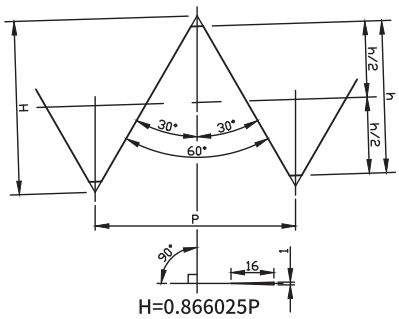

H=0.866025P
h=0.8P

R.(PT)
Rc(PT)

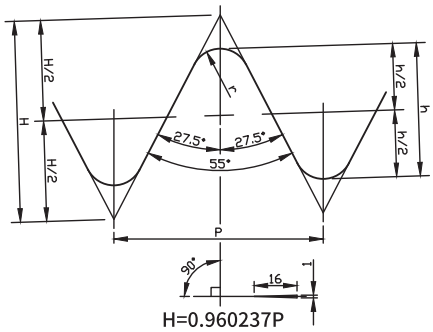

H=0.960237P
h=0.640327P

RP(PS)
G(PF)

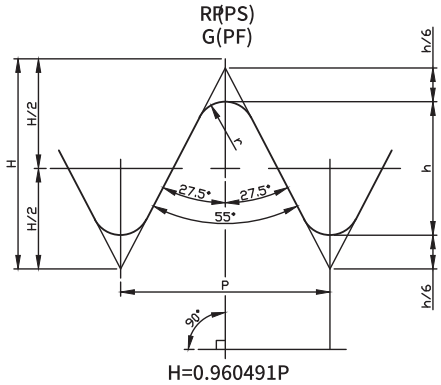

H=0.960491P
h=0.640327P

SOCKET-WELDING 45°LATERAL TEE

SPECIAL PRODUCT

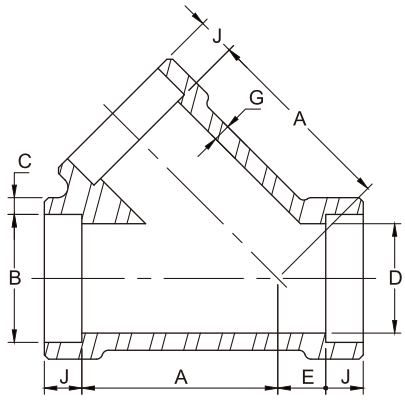

Dimensions are in millimeters.

Socket Welding								
DN	Nom. Pipe Size	B(1)	C	D(1)	A	E	G(1) (Min)	J(1)
3000Lb								
15	1/2	21.8	4.70	15.8	35	9	3.75	11.0
20	3/4	27.2	4.90	21.0	41	9	3.95	14.0
25	1	33.9	5.70	26.7	51	12	4.55	14.0
32	1-1/4	42.7	6.10	35.1	59	17	4.85	14.0
40	1-1/2	48.8	6.40	40.9	68	21	5.10	14.0
50	2	61.2	6.95	52.5	95	24	5.55	18.0
65	2-1/2	73.9	8.80	62.7	118	38	7.05	18.0
6000Lb								
15	1/2	21.8	6.00	11.8	41	9	4.78	11.0
20	3/4	27.2	7.00	15.6	51	12	5.56	14.0
25	1	33.9	7.95	20.7	59	17	6.35	14.0
32	1-1/4	42.7	7.95	29.5	68	21	6.35	14.0
40	1-1/2	48.8	8.95	34.0	95	24	7.14	14.0
50	2	61.2	10.95	42.9	106	31	8.74	18.0

(1) Dimensions refer to ANSI B16.11 for class 3M, socket welding fittings.
(2) Dimensions may vary in according to the customer and manufacturer requirements.

THREADED 45°LATERAL TEE

SPECIAL PRODUCT

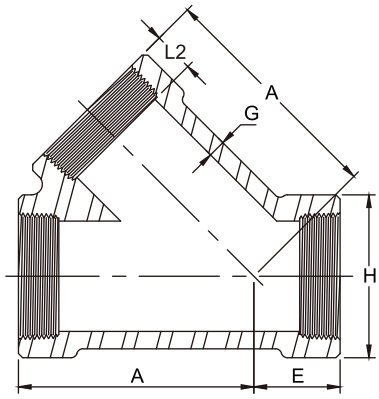

Dimensions are in millimeters.

Threaded						
DN	Nom. Pipe Size	Length of Thread (Min) L (2)	A	E	G(1) (Min)	H(1)
2000Lb						
15	1/2	13.6	46	20	3.18	33
20	3/4	13.9	55	23	3.18	38
25	1	17.3	65	26	3.68	46
32	1-1/4	18.0	73	31	3.89	56
40	1-1/2	18.4	82	35	4.01	62
50	2	19.2	113	42	4.27	75
65	2-1/2	28.9	136	56	5.61	92
3000Lb						
15	1/2	13.6	55	23	4.09	38
20	3/4	13.9	65	26	4.32	46
25	1	17.3	73	31	4.98	56
32	1-1/4	18.0	82	35	5.28	62
40	1-1/2	18.4	113	42	5.56	75
50	2	19.2	124	49	7.14	84

(1) Dimensions refer to ANSI B16.11, forged threaded fittings.
(2) Dimension L2 is the length of useful thread.
The length of useful thread shall be required by American National Standard for pipe threads (ANSI / ASME B1.20.1) .
(3) Dimensions of BSP and PT are available if required.
(4) Dimensions may vary according to the customer and manufacturer requirements.

SOCKET WELDING END 90° ELBOW OUTLET

SPECIAL PRODUCT

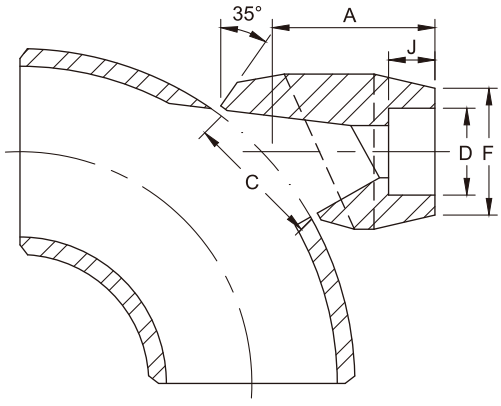

Dimensions are in millimeters.

90°ELBOW OUTLET						
Outlet Pipe		A	C	F	D	J
DN	IN					
3000Lb						
8	1/4	40.5	35.2	22.0	14.35	10.0
10	3/8	40.5	35.2	25.9	17.80	10.0
15	1/2	40.5	35.2	31.4	21.95	11.1
20	3/4	47.6	43.6	37.1	27.30	12.7
25	1	55.6	54.0	45.5	34.05	13.5
32	1-1/4	60.3	67.5	57.0	42.80	15.1
40	1-1/2	66.7	76.2	64.0	48.90	15.9
50	2	81.0	104.8	76.0	61.35	17.5
65	2-1/2	82.6	106.4	92.0	74.15	23.8
80	3	96.8	125.4	109.2	90.10	28.6
100	4	114.3	163.5	140.0	115.75	29.4
6000Lb						
8	1/4	40.5	34.9	26.0	14.35	10.0
10	3/8	40.5	34.9	33.0	17.80	10.0
15	1/2	47.6	34.9	38.0	21.95	10.0
20	3/4	55.6	43.6	44.0	27.30	14.3
25	1	60.3	54.0	57.0	34.05	15.9
32	1-1/4	66.7	67.5	64.0	42.80	20.6
40	1-1/2	85.7	76.2	76.0	48.90	20.6

(1) Socket weld in accordance with ASME B16.11
(2) Dimensions may vary in according to the customer and manufacturer requirements.

THREADED END 90° ELBOW OUTLET

SPECIAL PRODUCT

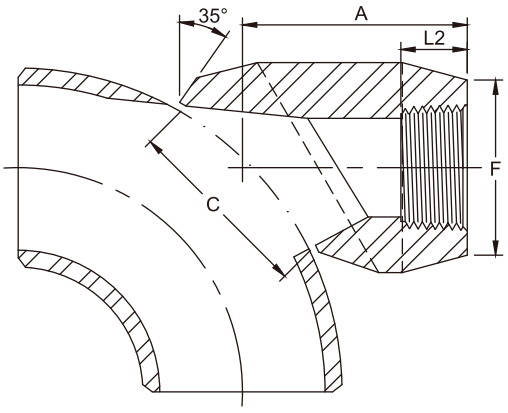

Dimensions are in millimeters.

90°ELBOW OUTLET					
Outlet Pipe		A	C	L2	F
DN	IN				
3000Lb					
8	1/4	40.5	35.2	11.4	22.0
10	3/8	40.5	35.2	12.4	25.9
15	1/2	40.5	35.2	14.9	31.4
20	3/4	47.6	43.6	16.8	37.1
25	1	55.6	54.0	19.6	45.5
32	1-1/4	60.3	67.5	21.9	57.0
40	1-1/2	66.7	76.2	22.7	64.0
50	2	81.0	104.8	23.9	76.0
65	2-1/2	82.6	106.4	30.5	92.0
80	3	96.8	125.4	32.8	109.2
100	4	114.3	163.5	34.6	140.0
6000Lb					
8	1/4	40.5	35.2	11.4	26.0
10	3/8	40.5	35.2	12.4	33.0
15	1/2	47.6	35.2	14.9	38.0
20	3/4	55.6	43.6	16.8	44.0
25	1	60.3	54.0	19.6	57.0
32	1-1/4	66.7	67.5	21.9	64.0
40	1-1/2	85.7	76.2	22.7	76.0

(1) Dimension L2 is According to ASME B1.20.1.
(2) Dimensions may vary in according to the customer and manufacturer requirements.

BUTT WELDING END 90° ELBOW OUTLET

SPECIAL PRODUCT

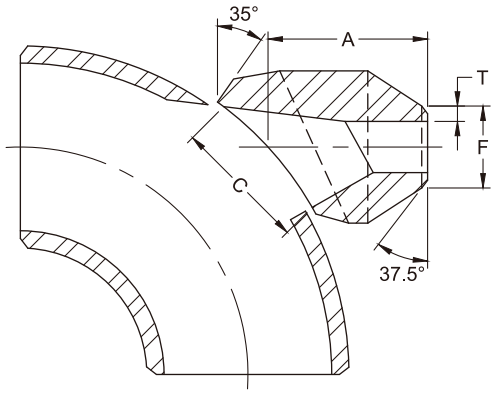

Dimensions are in millimeters.

90°ELBOW OUTLET					
Outlet Pipe		A	C	F	T
DN	IN				
Sch 80					
8	1/4	40.5	35.2	13.7	3.0
10	3/8	40.5	35.2	17.1	3.2
15	1/2	40.5	35.2	21.3	3.7
20	3/4	47.6	43.6	26.7	3.9
25	1	55.6	54.0	33.4	4.5
32	1-1/4	60.3	67.5	42.2	4.9
40	1-1/2	66.7	76.2	48.3	5.1
50	2	81.0	104.8	60.3	5.5
65	2-1/2	82.6	106.4	73.0	7.0
80	3	96.8	125.4	88.9	7.6
100	4	114.3	163.5	114.3	8.6
Sch 160					
8	1/4	40.5	35.2	13.7	3.7
10	3/8	40.5	35.2	17.1	4.0
15	1/2	47.6	35.2	21.3	4.7
20	3/4	55.6	43.6	26.7	5.5
25	1	60.3	54.0	33.4	6.4
32	1-1/4	66.7	67.5	42.2	6.4
40	1-1/2	85.7	76.2	48.3	7.1

(1) Weld bevel in accordance with ASME B16.25.
(2) Dimensions may vary in according to the customer and manufacturer requirements.

NIPPLE BRANCH OUTLET

SPECIAL PRODUCT

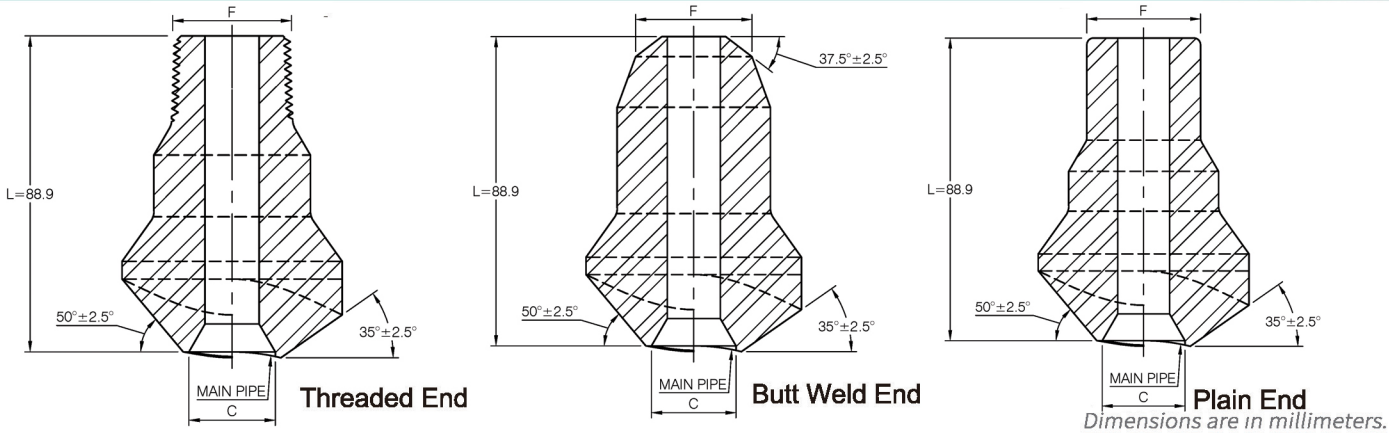

Dimensions are in millimeters.

Outlet Pipe(in)	*C*	*F*
3000Lb		
1/2	23.8	21.3
3/4	30.2	26.7
1	36.5	33.4
1-1/4	44.5	42.2
1-1/2	50.8	48.3
2	65.1	60.3
6000Lb		
1/2	13.8	21.3
3/4	18.9	26.7
1	24.3	33.4
1-1/4	32.5	42.2
1-1/2	38.1	48.3
2	49.2	60.3

(1) The end of the fitting can be :
- Plain
- Weld bevel in accordance with ASME B16.25
- Thread in accordance with ASME B1.20.1

(2) Range :
Thread : Class 3000 / 6000 Lb.
Plain and weld : Sch40/STD ; Sch80/XS ; Sch160/XXS.

(3) Dimensions may vary in according to the customer and manufacturer requirements.

UNION(M/F)
SPECIAL PRODUCT

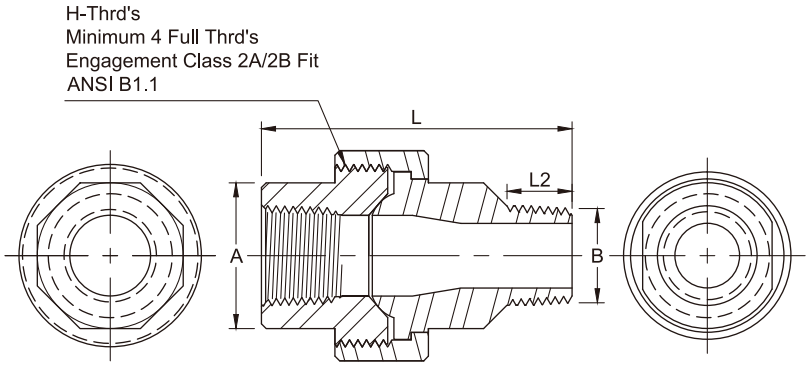

Dimensions are in millimeters.

Nom. Pipe Size	*A(1) (Min)*	*B*	*L2*	*L*
3000Lb				
1/4	19.0	13.7	15.1	55.4
3/8	22.9	17.1	15.3	60.0
1/2	27.7	21.3	19.9	68.0
3/4	33.5	26.7	20.2	75.9
1	41.4	33.4	25.0	86.0
1-1/4	50.5	42.2	25.6	95.1
1-1/2	57.2	48.3	26.0	100.5
2	70.1	60.3	26.9	112.1

(1) Dimensions refer to MSS SP-83 TABLE 5.
(2) Thread(L2) in accordance with ANSI/ASME B 1.20.1.
(3) Dimensions may vary in according to the customer and manufacturer requirements.

UNION(M/F)

SPECIAL PRODUCT

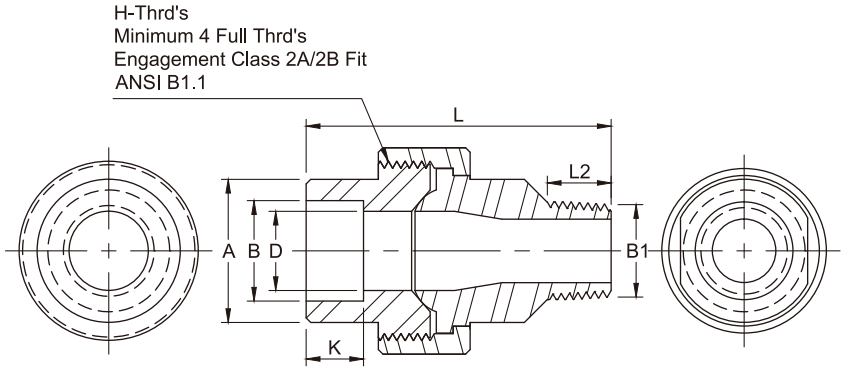

Dimensions are in millimeters.

Nom. Pipe Size	A(1) (Min)	B1	B	D	K	L2	L
3000Lb							
1/4	21.8	13.7	14.3	9.3	10.5	15.1	55.4
3/8	25.9	17.1	17.7	12.6	10.5	15.3	60.0
1/2	31.2	21.3	21.9	15.8	12.5	19.9	68.0
3/4	37.1	26.7	27.3	21.0	14.0	20.2	75.9
1	45.5	33.4	34.0	26.7	15.0	25.0	86.0
1-1/4	54.9	42.2	42.8	35.1	17.0	25.6	95.1
1-1/2	61.5	48.3	48.9	40.9	17.5	26.0	100.5
2	75.2	60.3	61.3	52.5	22.0	26.9	112.1

(1) Dimensions refer to MSS SP-83 TABLE 5.
(2) Thread (L2)/Socket weld in accordance with ANSI/ASME B 16.11 and ANSI/ASME B 1.20.1.
(3) Dimensions may vary in according to the customer and manufacturer requirements.

THREADED ADAPTER
SPECIAL PRODUCT

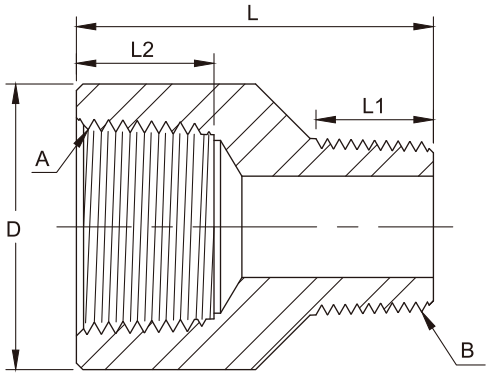

Dimensions are in millimeters.

DN	Nom. Pipe Size (A)	D	L	L2	L1	Threaded Size (B)
3000Lb						
8	1/4	19	33	11.4	14	1/8
10	3/8	22	35	12.4	14	1/4
15	1/2	28	42	14.9	19	3/8
20	3/4	35	47	16.8	19	1/2
25	1	44	55	19.6	24	3/4
32	1-1/4	57	63	21.9	24	1
40	1-1/2	64	66	22.7	24	1-1/4
50	2	76	76	23.9	26	1-1/2
65	2-1/2	92	90	30.5	38	2
80	3	108	110	32.8	40	2-1/2
100	4	140	120	34.6	40	3

(1) Dimension L1 and L2 is According to ANSI / ASME B 1.20.1.
(2) Dimensions may vary in according to the customer and manufacturer requirements.

DIMENSIONS OF SEAMLESS STEEL PIPE AND SEAMLESS STAINLESS STEEL PIPE (ASME B36.10M – 2022，ASME B36.19M – 2022)

Unit: m/m

TOLERANCES			NPS	STEEL PIPE																	STAINLESS STEEL PIPE				
A53 A106 O.D.	API 5L O.D.	A530 O.D.	IN	Outside Dia.			SCHEDULE NUMBER(SCH) AND WALL THICKNESS																		
				STD	MAX	MIN	5	10	20	30	40	STD	60	XS	80	100	120	140	160	XXS	5S	10S	40S	80S	160S
+1/64" -1/32"	+1/64" -1/32"	+1/64" -1/32"	1/8	10.29	10.69	9.89	-	1.24	-	1.45	1.73	1.73	-	2.41	2.41	-	-	-	3.15	4.83	-	1.24	1.73	2.41	3.15
			1/4	13.72	14.12	13.32	-	1.65	-	1.85	2.24	2.24	-	3.02	3.02	-	-	-	3.68	6.05	-	1.65	2.24	3.02	3.68
			3/8	17.14	17.54	16.74	-	1.65	-	1.85	2.31	2.31	-	3.20	3.20	-	-	-	4.01	6.40	-	1.65	2.31	3.20	4.01
			1/2	21.34	21.74	20.94	1.65	2.11	-	2.41	2.77	2.77	-	3.73	3.73	-	-	-	4.78	7.47	1.65	2.11	2.77	3.73	4.78
			3/4	26.67	27.07	26.27	1.65	2.11	-	2.41	2.87	2.87	-	3.91	3.91	-	-	-	5.56	7.82	1.65	2.11	2.87	3.91	5.56
			1	33.40	33.80	33.00	1.65	2.77	-	2.90	3.38	3.38	-	4.55	4.55	-	-	-	6.35	9.09	1.65	2.77	3.38	4.55	6.35
			1-1/4	42.16	42.56	41.76	1.65	2.77	-	2.97	3.56	3.56	-	4.85	4.85	-	-	-	6.35	9.70	1.65	2.77	3.56	4.85	6.35
			1-1/2	48.26	48.66	47.86	1.65	2.77	-	3.18	3.68	3.68	-	5.08	5.08	-	-	-	7.14	10.16	1.65	2.77	3.68	5.08	7.14
±1%		±1/32"	2	60.32	61.12	59.52	1.65	2.77	-	3.18	3.91	3.91	-	5.54	5.54	-	-	-	8.74	11.07	1.65	2.77	3.91	5.54	8.74
	±0.75%		2-1/2	73.02	73.82	72.22	2.11	3.05	-	4.78	5.16	5.16	-	7.01	7.01	-	-	-	9.52	14.02	2.11	3.05	5.16	7.01	9.52
			3	88.90	89.70	88.10	2.11	3.05	-	4.78	5.49	5.49	-	7.62	7.62	-	-	-	11.13	15.24	2.11	3.05	5.49	7.62	11.13
			3-1/2	101.60	102.40	100.80	2.11	3.05	-	4.78	5.74	5.74	-	8.08	8.08	-	-	-	-	-	2.11	3.05	5.74	8.08	-
			4	114.30	115.10	113.50	2.11	3.05	-	4.78	6.02	6.02	-	8.56	8.56	-	11.13	-	13.49	17.12	2.11	3.05	6.02	8.56	13.49
		+1/16" -1/32"	5	141.30	142.90	140.50	2.77	3.40	-	-	6.55	6.55	-	9.52	9.52	-	12.70	-	15.88	19.05	2.77	3.40	6.55	9.52	15.88
			6	168.28	169.88	167.48	2.77	3.40	-	-	7.11	7.11	-	10.97	10.97	-	14.27	-	18.26	21.95	2.77	3.40	7.11	10.97	18.26
			8	219.08	220.68	218.28	2.77	3.76	6.35	7.04	8.18	8.18	10.31	12.70	12.70	15.09	18.26	20.62	23.01	22.22	2.77	3.76	8.18	12.70	-
		+3/32" -1/32"	10	273.0	275.4	272.2	3.40	4.19	6.35	7.80	9.27	9.27	12.70	12.70	15.09	18.26	21.44	25.40	28.58	25.40	3.40	4.19	9.27	12.70	-
			12	323.8	326.2	323.0	3.96	4.57	6.35	8.38	10.31	9.52	14.27	12.70	17.48	21.44	25.40	28.58	33.32	25.40	3.96	4.57	9.52	12.70	-
			14	355.6	358.0	354.8	3.96	6.35	7.92	9.52	11.13	9.52	15.09	12.70	19.05	23.83	27.79	31.75	35.71	-	3.96	4.78	9.52	12.70	-
			16	406.4	408.8	405.6	4.19	6.35	7.92	9.52	12.70	9.52	16.66	12.70	21.44	26.19	30.96	36.53	40.49	-	4.19	4.78	9.52	12.70	-
			18	457.2	459.6	456.4	4.19	6.35	7.92	11.13	14.27	9.52	19.05	12.70	23.83	29.36	34.92	39.67	45.24	-	4.19	4.78	9.52	12.70	-
	+0.15% -0.25%	+1/8" -1/32"	20	508.0	511.2	507.2	4.78	6.35	9.52	12.70	15.09	9.52	20.62	12.70	26.19	32.54	38.10	44.45	50.01	-	4.78	5.54	9.52	12.70	-
			22	558.8	562.0	558.0	4.78	6.35	9.52	12.70	-	9.52	22.22	12.70	28.58	34.92	41.28	47.62	53.98	-	4.78	5.54	—	—	-
			24	609.6	612.8	608.8	5.54	6.35	9.52	14.27	17.48	9.52	24.61	12.70	30.96	38.89	46.02	52.37	59.54	-	5.54	6.35	9.52	12.70	-
			26	660.4	663.6	659.6	-	7.92	12.70	-	-	9.52	-	12.70	-	-	-	-	-	-	-	-	-	-	-
			28	711.2	715.2	710.4	-	7.92	12.70	15.88	-	9.52	-	12.70	-	-	-	-	-	-	-	-	-	-	-
			30	762.0	766.0	761.2	6.35	7.92	12.70	15.88	-	9.52	-	12.70	-	-	-	-	-	-	6.35	7.92	-	-	-
			32	813.0	817.0	812.2	-	7.92	12.70	15.88	17.48	9.52	-	12.70	-	-	-	-	-	-	-	-	-	-	-
			34	864.0	868.0	863.2	-	7.92	12.70	15.88	17.48	9.52	-	12.70	-	-	-	-	-	-	-	-	-	-	-
			36	914.0	918.8	913.2	-	7.92	12.70	15.88	19.05	9.52	-	12.70	-	-	-	-	-	-	-	-	-	-	-

PACKING LIST

Carton Size : 28×20×18 cm (L×W×H)

Unit : PC

SIZE NPS	90° Elbow				45° Elbow				Tee				
	2M NPT 3M SW	3M NPT	6M SW	6M NPT	2M NPT 3M SW	3M NPT	6M SW	6M NPT	2M NPT 3M SW	3M NPT	6M SW	6M NPT	9M SW
1/4"	150	100	100	80	150	100	100	80	100	80	80	50	50
3/8"	100	80	80	50	100	80	80	50	80	50	50	35	35
1/2"	80	50	50	25	80	50	50	25	50	35	35	20	15
3/4"	50	25	25	20	50	30	30	20	35	20	20	12	15
1"	30	20	20	12	30	20	20	12	20	15	15	10	10
1-1/4"	20	15	15	5	20	15	15	5	15	10	10	5	6
1-1/2"	15	6	6	4	15	8	8	4	10	5	5	4	4
2"	8	5	5	2	10	6	6	2	6	4	4	2	2
2-1/2"	4	2	2	1	5	2	2	2	3	2	2	1	—
3"	2	2	1	1	2	2	1	1	2	1	1	1	—
4"	1	1	1	1	1	1	1	1	1	1	1	1	—

SIZE NPS	Cross				Full Coupling				Half Coupling			
	2M NPT 3M SW	3M NPT	6M SW	6M NPT	3M SW	3M NPT	6M SW	6M NPT	3M SW	3M NPT	6M SW	6M NPT
1/4"	40	40	80	40	350	250	250	200	400	800	300	150
3/8"	40	40	40	30	250	200	200	100	250	500	150	80
1/2"	40	30	30	20	120	100	100	60	120	250	80	80
3/4"	30	20	20	12	80	70	70	35	80	150	50	50
1"	20	12	12	6	50	35	35	20	50	80	30	35
1-1/4"	10	6	6	4	30	20	20	15	30	35	25	25
1-1/2"	6	4	4	2	25	15	15	10	25	30	15	20
2"	4	4	2	1	15	10	10	5	15	20	10	6
2-1/2"	2	1	—	—	10	5	5	3	10	12	5	4
3"	1	1	—	—	6	3	3	2	6	6	3	2
4"	—	—	—	—	4	2	2	1	4	4	—	1

SIZE NPS	Cap			Boss				Street Elbow		Insert	
	3M SW/NPT	6M SW	6M NPT	3M SW	3M NPT	6M SW	6M NPT	3M NPT	6M NPT	3M SW	6M SW
1/4"	300	200	250	250	200	200	150	150	80	300	250
3/8"	250	150	130	200	150	150	100	80	50	300	200
1/2"	130	80	80	90	80	80	60	50	25	150	120
3/4"	80	50	50	70	40	40	35	30	20	100	80
1"	50	30	30	35	30	30	20	20	12	80	60
1-1/4"	30	25	25	30	20	20	15	15	5	60	50
1-1/2"	25	15	15	25	15	15	10	8	4	40	40
2"	15	8	10	15	10	10	5	5	2	25	20
2-1/2"	10	5	4	10	5	—	—	4	—	12	10
3"	4	3	3	6	3	—	—	2	—	10	8
4"	3	2	2	4	2	—	—	1	—	4	2

SIZE NPS	OutLet		Union		Hex Plug	Round Plug	Square Plug	Bushing	Hex Nipple	Swage Nipple
	3M SW/NPT	6M SW/NPT	3M SW/NPT	6M SW/NPT	NPT	NPT	NPT	NPT	NPT	S40/S80 S160/XXS
1/4"	200	100	70	—	800	250	800	600	500	200
3/8"	150	100	70	50	600	200	500	500	400	150
1/2"	150	100	50	30	250	150	300	400	200	100
3/4"	100	50	30	20	150	100	200	200	100	70
1"	50	30	20	14	100	80	150	100	65	50
1-1/4"	35	25	14	10	35	50	80	60	35	30
1-1/2"	25	15	10	6	25	30	50	50	25	20
2"	15	10	6	2	20	15	30	25	15	8
2-1/2"	10	5	2	—	8	10	15	15	5	4
3"	6	2	2	—	6	5	10	10	3	3
4"	3	1	1	—	3	3	3	5	2	1

PLYWOOD CASE SIZE：109 × 94 × 86 cm / 60 CARTON
PLYWOOD CASE SIZE： 93 × 90 × 86 cm / 48 CARTON
PLYWOOD CASE SIZE： 93 × 90 × 68 cm / 36 CARTON

WEIGHT LIST

Unit : KG

SIZE NPS	90° Elbow					45° Elbow					Tee				
	2M NPT	3M SW	3M NPT	6M SW	6M NPT	2M NPT	3M SW	3M NPT	6M SW	6M NPT	2M NPT	3M SW	3M NPT	6M SW	6M NPT
1/8"	0.10	0.10	0.09	0.10	0.17	0.09	0.10	0.10	0.09	0.11	0.13	0.13	0.13	0.14	0.20
1/4"	0.09	0.08	0.15	0.15	0.33	0.08	0.08	0.12	0.14	0.27	0.11	0.11	0.22	0.20	0.41
3/8"	0.13	0.12	0.29	0.29	0.45	0.10	0.11	0.24	0.26	0.39	0.17	0.15	0.38	0.43	0.63
1/2"	0.25	0.25	0.42	0.44	0.80	0.20	0.20	0.37	0.36	0.63	0.31	0.32	0.56	0.56	0.98
3/4"	0.35	0.33	0.64	0.73	1.31	0.27	0.29	0.56	0.57	1.07	0.43	0.46	0.92	0.94	1.65
1"	0.52	0.53	1.14	1.17	1.61	0.45	0.43	0.94	1.01	1.27	0.69	0.65	1.49	1.49	2.17
1-1/4"	0.90	0.84	1.42	1.48	2.93	0.68	0.69	1.03	1.11	2.24	1.07	1.04	1.76	1.93	3.74
1-1/2"	1.06	1.07	2.63	2.79	3.79	0.82	0.79	2.05	2.22	2.54	1.39	1.35	3.27	3.37	4.71
2"	1.70	1.50	2.92	3.28	7.31	1.41	1.35	2.23	2.52	4.82	2.16	2.04	3.53	3.95	8.87
2-1/2"	3.61	3.20	5.99	8.11	11.18	2.60	2.53	4.19	—	8.16	4.11	3.98	6.99	10.05	13.11
3"	4.81	5.38	8.88	18.10	17.73	4.23	5.10	6.15	14.54	14.16	6.12	5.90	10.19	22.00	21.70
4"	10.21	10.95	14.85	16.77	15.76	8.96	9.41	11.67	—	—	13.27	12.53	19.13	—	18.00

SIZE NPS	Cross				Full Coupling				Half Coupling			
	2M NPT	3M SW	3M NPT	6M SW	3M SW	3M NPT	6M SW	6M NPT	3M SW	3M NPT	6M SW	6M NPT
1/8"	0.17	0.16	0.29	0.17	0.05	0.04	0.05	0.08	0.04	0.02	0.06	0.07
1/4"	0.14	0.13	0.26	0.26	0.05	0.05	0.07	0.10	0.05	0.03	0.09	0.05
3/8"	0.21	0.20	0.44	0.45	0.07	0.07	0.11	0.20	0.07	0.03	0.12	0.09
1/2"	0.40	0.35	0.76	0.67	0.13	0.14	0.20	0.32	0.15	0.06	0.19	0.16
3/4"	0.54	0.47	1.06	1.07	0.19	0.23	0.27	0.45	0.21	0.11	0.31	0.24
1"	0.83	0.73	1.79	1.82	0.33	0.45	0.44	0.87	0.34	0.23	0.51	0.45
1-1/4"	1.24	1.12	2.13	2.26	0.41	0.73	0.66	1.09	0.48	0.37	0.65	0.55
1-1/2"	1.75	1.58	3.93	3.96	0.59	1.18	1.11	1.94	0.56	0.54	0.91	0.96
2"	2.65	2.25	4.27	4.42	0.86	1.40	1.62	2.87	1.09	0.70	1.92	1.39
2-1/2"	5.26	4.37	8.47	—	1.40	2.29	—	4.20	1.63	1.13	—	2.10
3"	7.58	7.24	12.61	—	1.78	3.38	—	6.10	2.18	1.68	—	3.05
4"	16.00	14.58	20.25	—	2.85	5.65	—	10.04	3.71	3.11	—	5.02

SIZE NPS	Reducing Coupling				Cap				Union		Street Elbow	Hex Nipples	Square Head Plug
	3M SW	3M NPT	6M SW	6M NPT	3M SW	3M NPT	6M SW	6M NPT	3M SW	3M NPT	3M NPT	3M NPT	
1/8"	0.04	0.05	—	0.08	0.03	0.02	0.05	0.06	0.28	0.28	0.12	0.01	0.01
1/4"	0.05	0.05	—	0.06	0.04	0.04	0.08	0.06	0.25	0.25	0.11	0.03	0.02
3/8"	0.07	0.08	—	0.18	0.06	0.05	0.10	0.09	0.25	0.26	0.24	0.04	0.03
1/2"	0.16	0.15	0.24	0.35	0.13	0.11	0.16	0.25	0.33	0.34	0.34	0.08	0.05
3/4"	0.25	0.18	0.29	0.53	0.16	0.18	0.23	0.40	0.49	0.48	0.55	0.12	0.08
1"	0.43	0.62	0.58	1.01	0.25	0.37	0.44	0.71	0.74	0.77	1.02	0.24	0.16
1-1/4"	0.67	0.97	1.37	1.05	0.45	0.62	0.64	0.90	1.10	1.14	1.24	0.39	0.27
1-1/2"	0.85	1.49	1.07	2.30	0.59	0.72	0.94	1.44	1.61	1.39	2.01	0.38	0.38
2"	1.66	2.20	1.83	3.86	0.96	1.09	1.55	2.25	2.16	2.43	2.91	1.00	0.63
2-1/2"	2.60	3.22	—	4.20	1.62	2.22	—	3.68	3.97	3.63	—	1.29	1.08
3"	3.14	4.82	—	6.10	2.68	3.50	3.60	5.12	5.94	5.27	—	1.87	1.53
4"	5.50	8.97	—	10.04	3.82	4.84	—	8.60	12.79	12.00	—	3.37	3.36

SIZE NPS	Hex Head Plug	Round Head Plug	Bushing	Reducing Inserts											
				SIZE	3M	6M	SIZE	3M	6M	SIZE	3M	6M	SIZE	3M	6M
1/8"	0.01	0.02	—	3/8x1/4	0.05	0.06	1-1/4x1/2	0.29	0.34	2x1/2	0.79	0.87	4x2-1/2	3.23	—
1/4"	0.03	0.05	0.01	1/2x3/8	0.07	0.09	1-1/4x3/8	0.32	0.36	2-1/2x2	1.03	1.43	4x2	3.72	—
3/8"	0.05	0.07	0.01	1/2x1/4	0.07	0.08	1-1/4x1/4	0.34	0.37	2-1/2x1-1/2	1.16	1.26	4x1-1/2	4.20	—
1/2"	0.07	0.12	0.03	3/4x1/2	0.12	0.15	1-1/2x1-1/4	0.37	0.53	2-1/2x1-1/4	1.45	1.38	4x1-1/4	4.39	—
3/4"	0.14	0.20	0.05	3/4x3/8	0.08	0.12	1-1/2x1	0.29	0.52	2-1/2x1	1.52	1.56			
1"	0.22	0.34	0.09	3/4x1/4	0.10	0.13	1-1/2x3/4	0.37	0.48	2-1/2x3/4	1.63	1.65			
1-1/4"	0.44	0.55	0.25	1x3/4	0.17	0.27	1-1/2x1/2	0.41	0.52	3x2-1/2	1.38	2.41			
1-1/2"	0.59	0.79	0.34	1x1/2	0.13	0.22	1-1/2x3/8	0.45	0.55	3x2	1.39	1.76			
2"	1.03	1.47	0.45	1x3/8	0.16	0.21	2x1-1/2	0.59	0.87	3x1-1/2	1.41	2.08			
2-1/2"	1.80	2.34	0.60	1x1/4	0.19	0.22	2x1-1/4	0.51	0.61	3x1-1/4	2.12	2.21			
3"	2.60	3.26	1.16	1-1/4x1	0.30	0.40	2x1	0.72	0.75	3x1	2.31	2.39			
4"	5.20	6.24	3.20	1-1/4x3/4	0.25	0.30	2x3/4	0.73	0.83	4x3	2.29	—			

BOTH-WELL
柏緯鐵工股份有限公司

仁武廠
Ren-Wu Factory

814020
高雄市仁武區烏林里仁心路303號
No.303 Renxin Road, Renwu District, Kaohsiung City, Taiwan.(814020)

TEL
(07)371-1536 / 371-0497 / 372-0260
FAX
(07)371-3864 / (07)371-3882

e-mail
BW_SalesT1@bothwell.com.tw

大發廠
Da-Fa Factory

831134
高雄市大寮區大發工業區華東路46號
No.46 Huadong Road, Dafa Industrial Parks, Daliao District, Kaohsiung City, Taiwan.(831134)

TEL
(07)788-1179
FAX
(07)787-2303

Web
www.bothwell.com.tw